INDEX

INDEX

INDEX

SERIES 800

WIRELESS DATA TRANSFER SYSTEM

- Max. transmission distance: 10m
- For single channel receiver (**code: 800-01**), it can be only connected to one receiver(gages). There is no software, the data can be transferred into Excel, Word directly.
- For multi- channel receiver(**code: 800-02**) ,it can be connected to Max. 8 receivers(gages). It includes a software, the data can be transferred into the software.

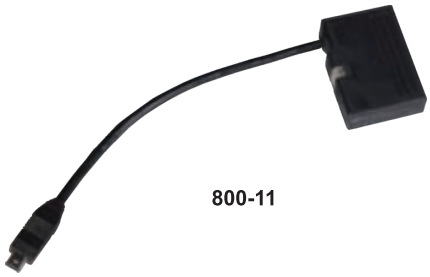

800-11

800-01

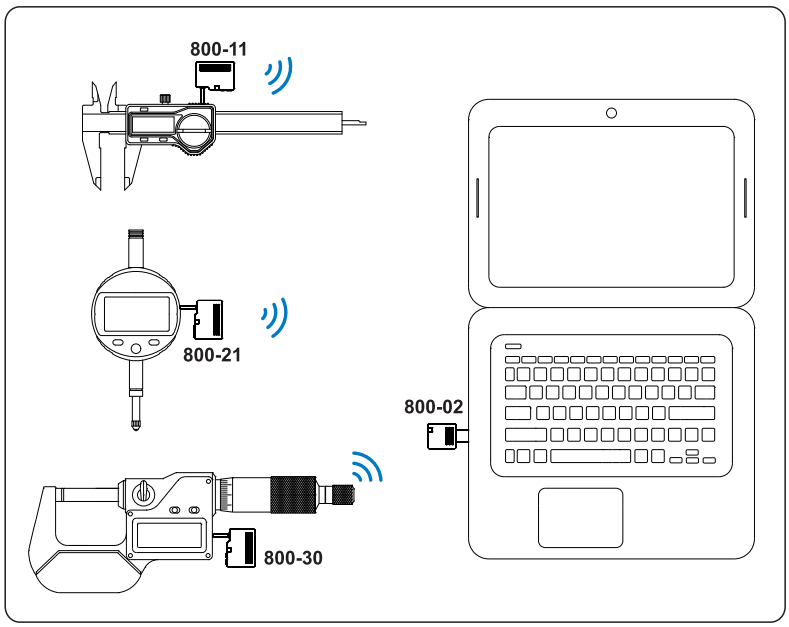

Code	Name	Products
800-01	single channel receiver	for follow measuring tools
800-02	multi- channel receiver	for follow measuring tools
800-10	transmitter	for digital calipers with following electronics 
800-11	transmitter	for digital calipers with following electronics 
800-21	transmitter	for digital indicators with following electronics 
800-20	transmitter	for digital indicators with following electronics 
800-30	transmitter	for digital micrometers with data output with following electronics 

USB OUTPUT INTERFACE 100/200/300/400

- The cable without software, push the black button or footswitch, the data can be transferred into Excel, Word directly.
- The cable with software, the data can be transferred into the software at a set interval time automatically.

100-11

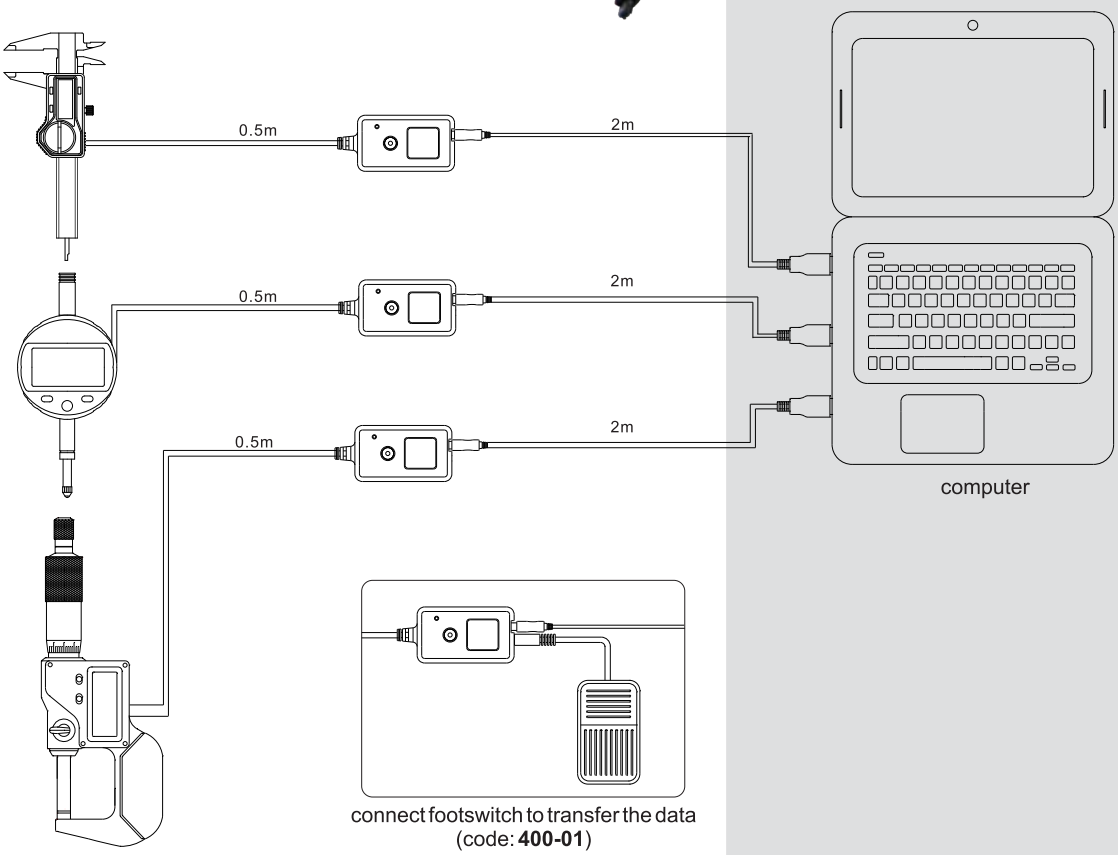

connect footswitch to transfer the data (code: **400-01**)

Code	Software	Products
100-03	Without	for digital calipers with following electronics 
100-04	With	
100-11	Without	for digital calipers with following electronics  
100-12	With	
100-13	Without	for digital calipers and micrometers with following electronics  
100-15	Without	for digital calipers with following electronics 

Code	Software	Products
200-03	Without	for digital indicators with following electronics 
200-04	With	
200-01	Without	for digital indicators with following electronics   
200-02	With	
300-01	Without	for digital micrometers with following electronics 
300-03	Without	for digital micrometers with data output with following electronics 

SERIES 111 DIGITAL CALIPER

- High accuracy due to using the glass scale
- Resolution: 0.01mm/0.0005"
- Buttons: on/off, zero, mm/in, ABS
- Data output
- Automatic power on/off
- Meet DIN862
- Made of stainless steel

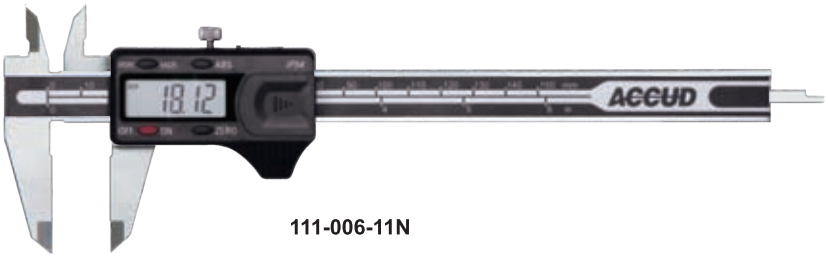

111-006-11N

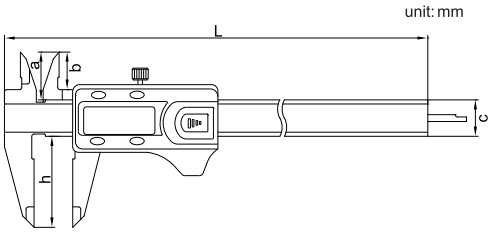

Code	Range	Accuracy	a	b	c	h	L
111-006-11N	0-150mm/0-6"	±0.03mm	21	16	16	40	236
111-008-11N	0-200mm/0-8"	±0.03mm	24	19	16	50	286
111-012-11N	0-300mm/0-12"	±0.03mm	25	20.5	16	60	400

SERIES 111 DIGITAL CALIPER

- High accuracy due to using the glass scale
- Resolution: 0.01mm/0.0005"
- Buttons: on/off, zero, mm/in, ABS
- Data output
- Automatic power on/off
- Meet DIN862
- Made of stainless steel

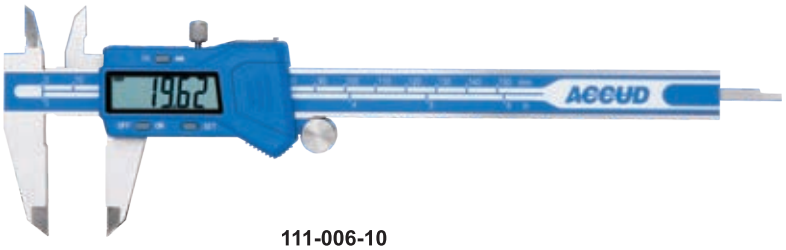

111-006-10

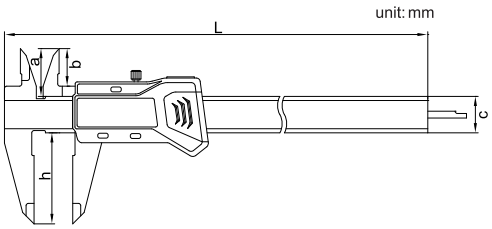

Code	Range	Accuracy	a	b	c	h	L
111-006-10	0-150mm/0-6"	±0.03mm	21	16	16	40	236
111-008-10	0-200mm/0-8"	±0.03mm	24	19	16	50	286
111-012-10	0-300mm/0-12"	±0.03mm	25	20.5	16	60	400

DIGITAL CALIPER SERIES 111

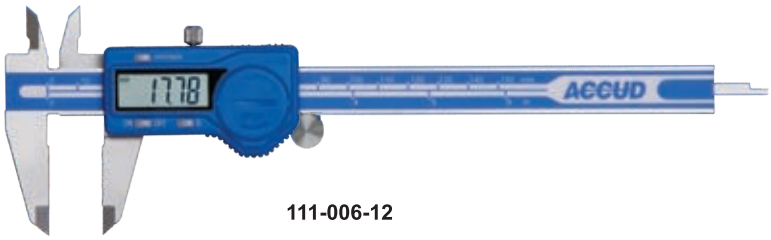

111-006-12

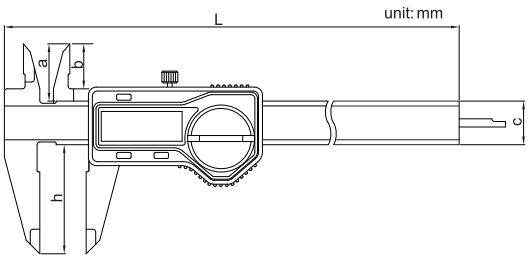

- Resolution: 0.01mm/0.0005"
- Buttons: on/off, zero, mm/inch
- Data output
- Automatic power on/off
- Meet DIN862
- Made of stainless steel

Code	Range	Accuracy	a	b	c	h	L
111-006-12	0-150mm/0-6"	±0.03mm	21	16	16	40	236
111-008-12	0-200mm/0-8"	±0.03mm	24	19	16	50	286
111-012-12	0-300mm/0-12"	±0.03mm	25	20.5	16	60	400

DIGITAL CALIPER WITH ROUND DEPTH BAR SERIES 111

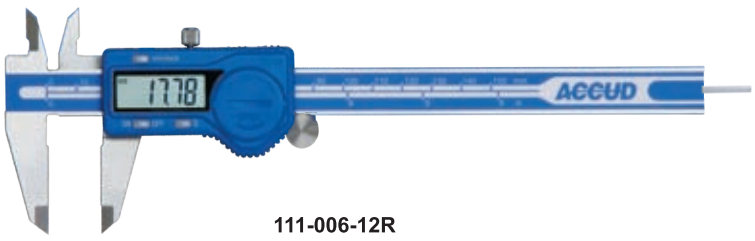

111-006-12R

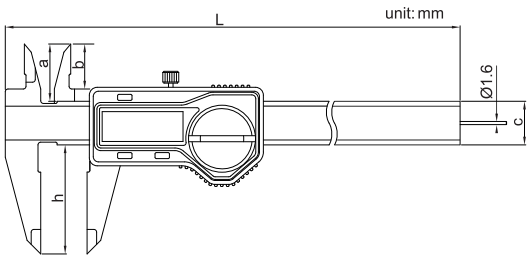

- With round depth bar, for small hole depth measurement
- Resolution: 0.01mm/0.0005"
- Buttons: on/off, zero, mm/inch
- Data output
- Automatic power on/off
- Meet DIN862
- Made of stainless steel

round depth bar

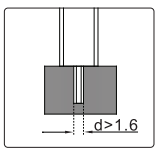

Code	Range	Accuracy	Thumb roller	a	b	c	h	L
111-006-12R	0-150mm/0-6"	±0.03mm	with	21	16	16	40	236
111-006-12RW	0-150mm/0-6"	±0.03mm	without	21	16	16	40	236

SERIES 111 DIGITAL CALIPER WITH METAL COVER

- Resolution: 0.01mm/0.0005"
- Buttons: on/off, zero, mm/inch
- Made of stainless steel

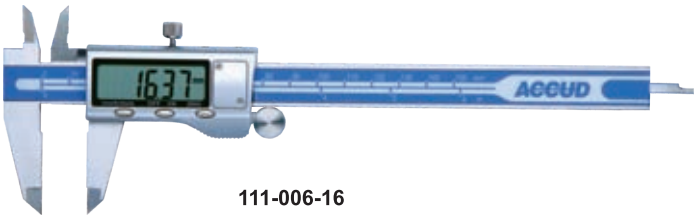

111-006-16

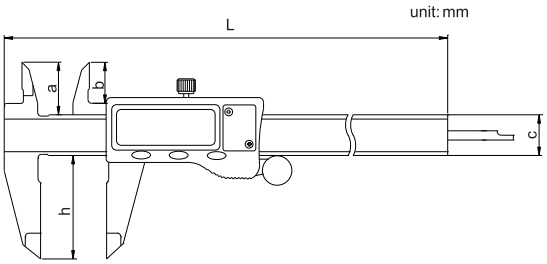

Code	Range	Accuracy	a	b	c	h	L
111-006-16	0-150mm/0-6"	±0.03mm	21	16	16	40	236
111-008-16	0-200mm/0-8"	±0.03mm	24	19	16	50	286
111-012-16	0-300mm/0-12"	±0.03mm	25	20.5	16	60	400

SERIES 111 DIGITAL CALIPER

- High accuracy
- Absolute system
- Resolution: 0.01mm/0.0005"
- Buttons: on/off, ABS/REL, inch/mm, origin
- Data output
- Meet DIN862
- Made of stainless steel

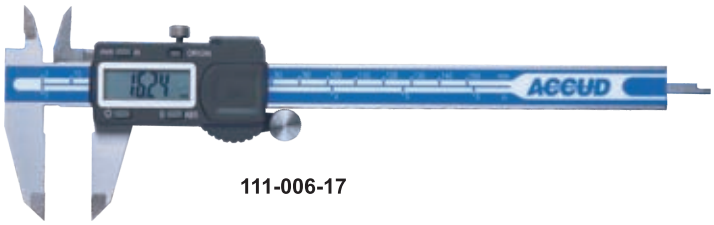

111-006-17

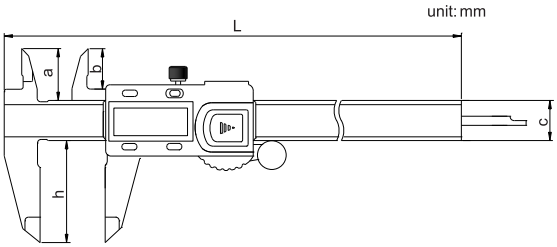

Code	Range	Accuracy	a	b	c	h	L
111-006-17	0-150mm/0-6"	±0.02mm	21	16.5	16	40	236
111-008-17	0-200mm/0-8"	±0.02mm	24	19	16	50	286
111-012-17	0-300mm/0-12"	±0.03mm	26	20.5	16	60	400

IP67 DIGITAL CALIPER

SERIES 112

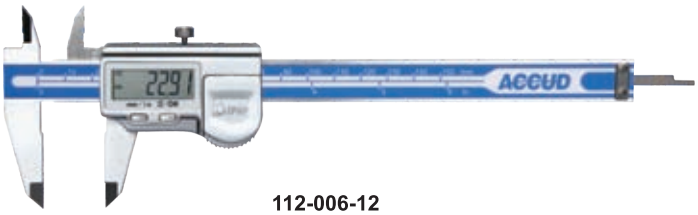

112-006-12

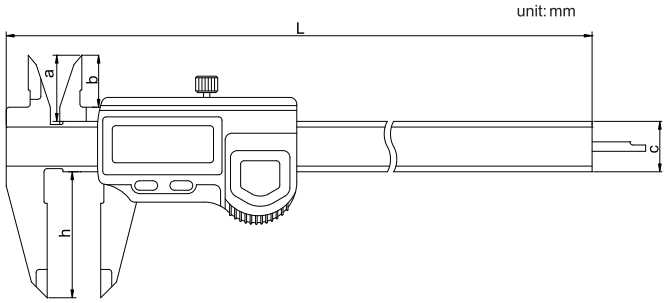

- IP67 protection level
- Absolute measuring system
- Resolution: 0.01mm/0.0005"
- Automatic power off
- Buttons: on/off, zero, mm/inch

Code	Range	Accuracy	a	b	c	h	L
112-006-12	0-150mm/0-6"	±0.03mm	21	16.5	16	40	236
112-008-12	0-200mm/0-8"	±0.03mm	24	20	16	50	286
112-012-12	0-300mm/0-12"	±0.03mm	25	20.5	16	60	400

FRACTIONAL DIGITAL CALIPER

SERIES 113

113-006-11

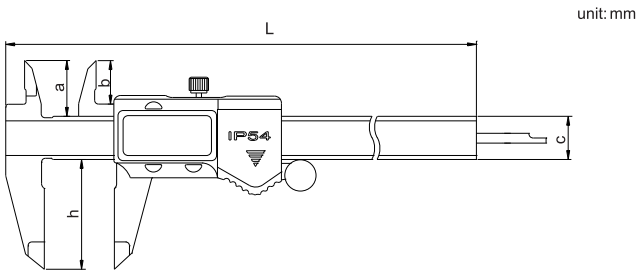

- With fraction reading
- Resolution: 0.01mm, 0.0005", 1/128"
- Buttons: on/off, zero, mm/inch
- Made of stainless steel

Code	Range	Accuracy	a	b	c	h	L
113-006-11	0-150mm/0-6"	±0.03mm	21	16	16	40	236
113-008-11	0-200mm/0-8"	±0.03mm	24	19	16	50	286
113-012-11	0-300mm/0-12"	±0.03mm	25	20.5	16	60	400

114 MINI DIGITAL CALIPER

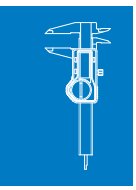

- Resolution: 0.01mm/0.0005"
- Buttons: on/off, zero, mm/inch
- Meet DIN862
- Made of stainless steel

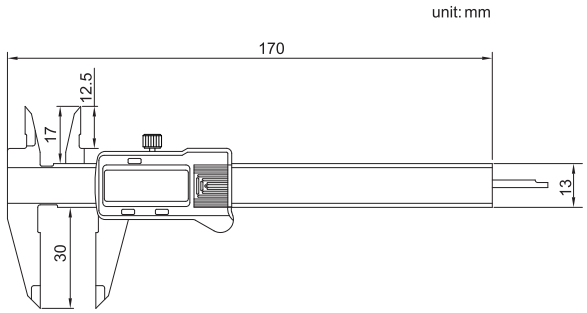

Code	Range	Accuracy
114-004-11	0-100mm/0-4"	±0.02mm

SERIES 115 DIGITAL CALIPER

- Ceramic tipped jaws for outside measurements, good wear-resistance, non-magnetic, non-conductive
- Resolution: 0.01mm/0.0005"
- Buttons: on/off, zero, mm/inch
- Data output
- Automatic power on/off
- Made of stainless steel

115-006-11

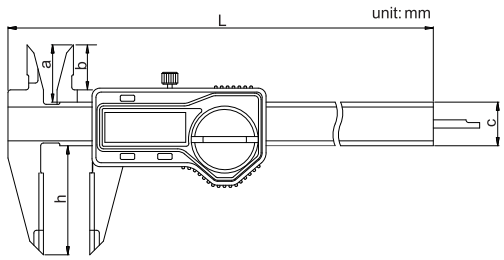

Code	Range	Accuracy	a	b	c	h	L
115-006-11	0-150mm/0-6"	0.02mm	21	16.5	16	40	236
115-008-11	0-200mm/0-8"	0.02mm	24	19	16	50	286
115-012-11	0-300mm/0-12"	0.03mm	26	20.5	16	60	400

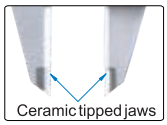

DIGITAL CALIPER WITH CARBIDE TIPPED JAWS

SERIES 116

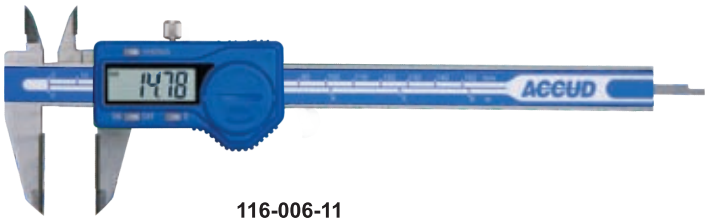

116-006-11

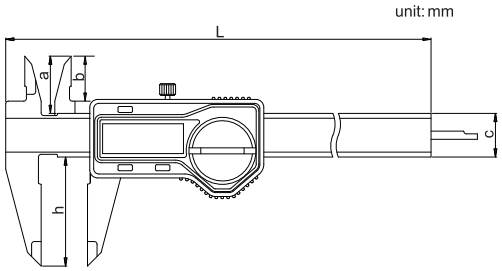

- Carbide tipped jaws for inside and outside measurements, good wear- resistance
- Resolution: 0.01mm/0.0005"
- Buttons: on/off, zero, mm/inch
- Data output
- Automatic power on/off
- Made of stainless steel

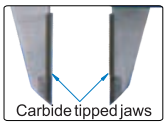

Code	Range	Accuracy	a	b	c	h	L
116-006-11	0-150mm/0-6"	±0.03mm	21	16	16	40	236
116-008-11	0-200mm/0-8"	±0.03mm	24	19	16	50	286
116-012-11	0-300mm/0-12"	±0.03mm	25	20.5	16	60	400

PLASTIC DIGITAL CALIPER

117

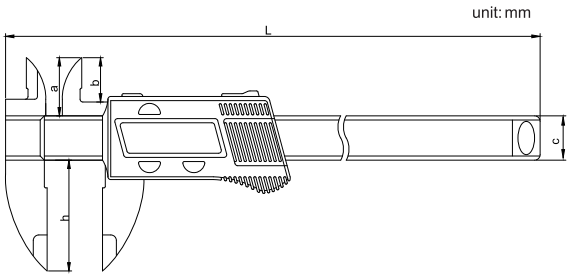

- Made of hard plastic
- Resolution: 0.01mm/0.0005"
- Buttons: on/off, zero, mm/inch

Code	Range	Accuracy	a	b	c	h	L
117-006-11	0-150mm/0-6"	±0.1mm	21	16	16	40	243

SERIES 101 DIAL CALIPER

- Shockproof dial indicator
- Made of stainless steel

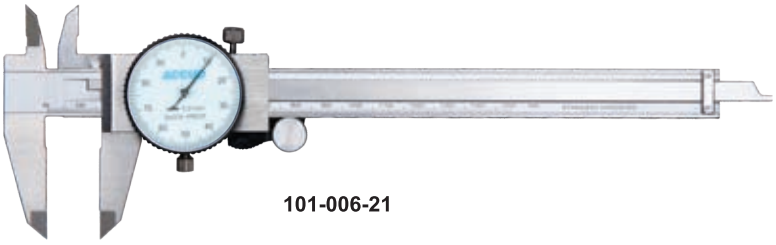

101-006-21

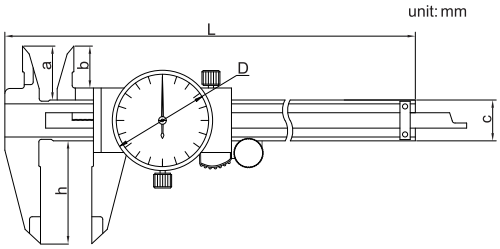

Code	Range	Graduation	Accuracy	a	b	c	h	D	L
101-006-11	0-150mm	0.01mm	±0.03mm	21	16.5	16	40	Ø39	233
101-008-11	0-200mm	0.01mm	±0.03mm	24	19	16	50	Ø39	288
101-012-11	0-300mm	0.01mm	±0.04mm	30	25	20	64	Ø44	390
101-006-21	0-150mm	0.02mm	±0.03mm	21	16.5	16	40	Ø39	233
101-008-21	0-200mm	0.02mm	±0.03mm	24	19	16	50	Ø39	288
101-012-21	0-300mm	0.02mm	±0.04mm	30	25	20	64	Ø44	390

SERIES 101 INCH DIAL CALIPER

- Shockproof dial indicator
- Made of stainless steel

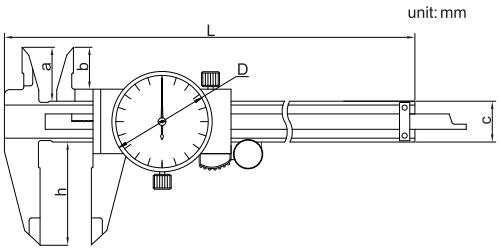

Code	Range	Graduation	Accuracy	a	b	c	h	D	L
101-006-11I	0-6"	0.001in	±0.0015in	21	16.5	16	40	Ø39	233
101-008-11I	0-8"	0.001in	±0.0020in	24	19	16	50	Ø39	288
101-012-11I	0-12"	0.001in	±0.0020in	30	25	20	64	Ø44	390

DIAL CALIPER SERIES 103

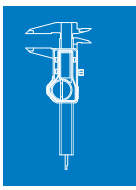

- Shockproof dial indicator
- Made of stainless steel

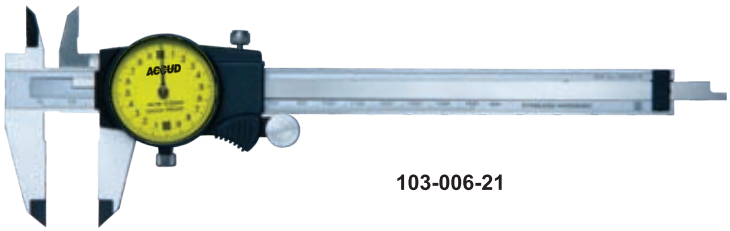

103-006-21

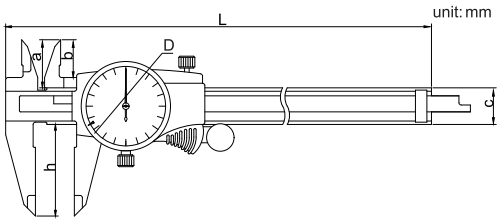

Code	Range	Graduation	Accuracy	a	b	c	h	D	L
103-006-11	0-150mm	0.01mm	±0.03mm	21	16.5	16	40	Ø39	233
103-008-11	0-200mm	0.01mm	±0.03mm	24	19	16	50	Ø39	288
103-006-21	0-150mm	0.02mm	±0.03mm	21	16.5	16	40	Ø39	233
103-008-21	0-200mm	0.02mm	±0.03mm	24	19	16	50	Ø39	288
103-012-21	0-300mm	0.02mm	±0.04mm	30	25	20	64	Ø44	390

VERNIER CALIPER SERIES 120

- Meet DIN862
- Stain chrome plated reading surface
- Made of stainless steel

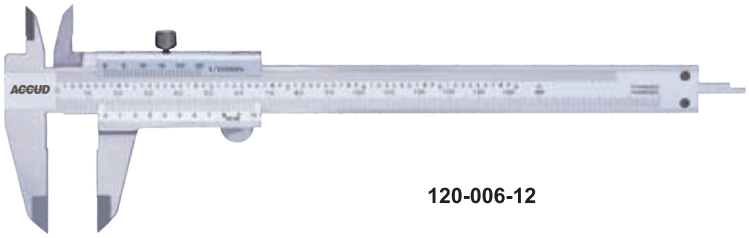

120-006-12

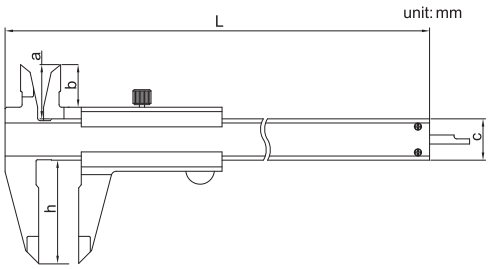

Code	Range	Graduation	Accuracy	a	b	c	h	L
120-006-12	0-150mm/0-6"	0.02mm/0.001"	±0.03mm	20.5	15.5	16	40	235
120-008-12	0-200mm/0-8"	0.02mm/0.001"	±0.03mm	23.5	19	16	50	290
120-012-12	0-300mm/0-12"	0.02mm/0.001"	±0.03mm	27.5	22	20	64	414
120-006-14	0-150mm/0-6"	0.05mm/1/128"	±0.05mm	20.5	15.5	16	40	235
120-008-14	0-200mm/0-8"	0.05mm/1/128"	±0.05mm	23.5	19	16	50	290
120-012-14	0-300mm/0-12"	0.05mm/1/128"	±0.05mm	27.5	22	20	64	414

SERIES 124 VERNIER CALIPER

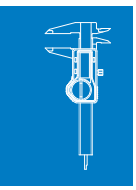

- With auto thumb clamp
- Meet DIN862
- Stain chrome plated reading surface
- Made of stainless steel

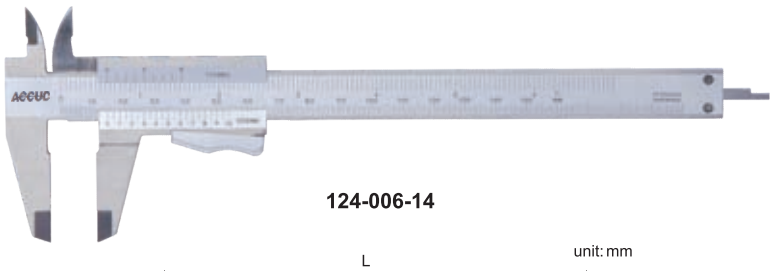

124-006-14

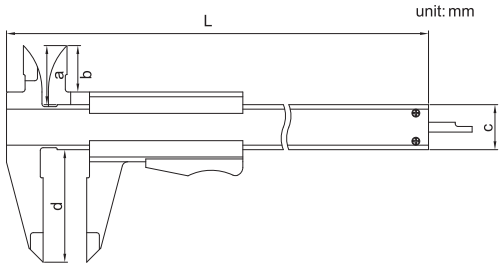

Code	Range	Graduation	Accuracy	a	b	c	h	L
124-006-12	0-150mm/0-6"	0.02mm/0.001"	±0.03mm	20.5	15.5	16	40	235
124-008-12	0-200mm/0-8"	0.02mm/0.001"	±0.03mm	23.5	19	16	50	290
124-006-14	0-150mm/0-6"	0.05mm/1/128"	±0.05mm	20.5	15.5	16	40	235
124-008-14	0-200mm/0-8"	0.05mm/1/128"	±0.05mm	23.5	19	16	50	290

SERIES 125 VERNIER CALIPER

- With fine adjustment
- Graduation: 0.02mm/0.001"
- Meet DIN862
- Stain chrome plated reading surface
- Made of stainless steel

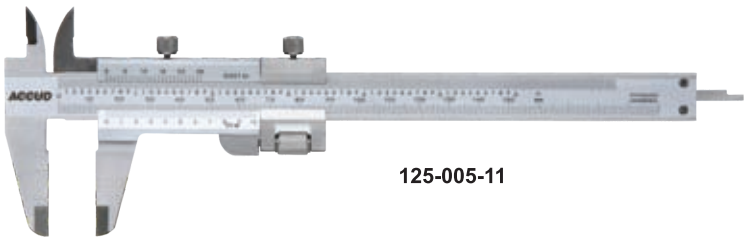

125-005-11

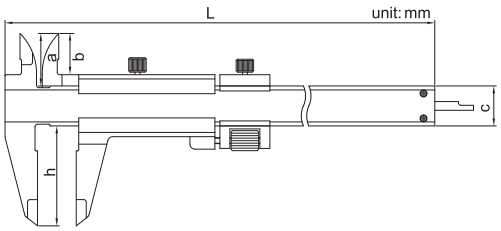

Code	Range	Accuracy	a	b	c	h	L
125-005-11	0-130mm/0-5"	±0.03mm	20.5	16.5	16	40	230
125-007-11	0-180mm/0-7"	±0.03mm	23.5	19	16	50	295
125-011-11	0-280mm/0-11"	±0.03mm	36	20	20	60	410

MINI VERNIER CALIPER SERIES 121

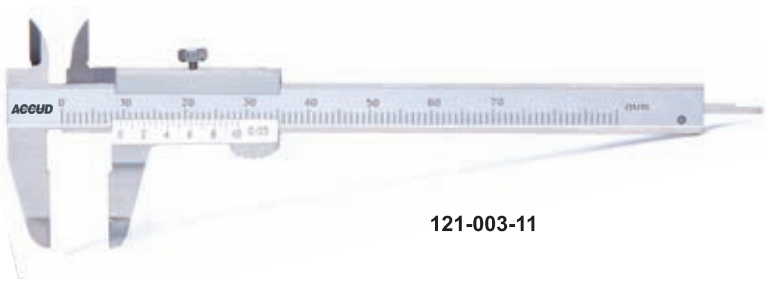

121-003-11

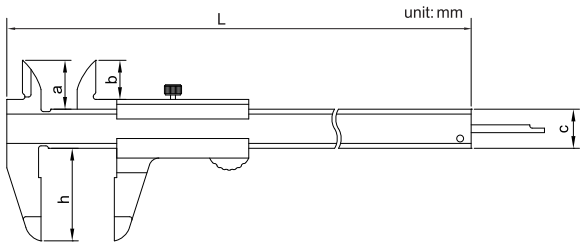

- Meet DIN862
- Stain chrome plated reading surface
- Made of stainless steel

Code	Range	Graduation	Accuracy	a	b	h	L	C
121-003-11	0-70mm	0.05mm	±0.05mm	10	8	19	113	8
121-004-11	0-100mm	0.05mm	±0.05mm	17	13	30	160	12

MINI VERNIER CALIPER SERIES 121

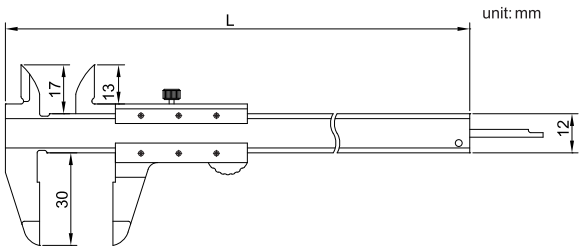

- Meet DIN862
- Made of stainless steel
- Satin chrome plated reading surface

Code	Range	Graduation	Accuracy	L
121-004-11B	0-100mm	0.05mm	±0.05mm	160

SERIES 118 DIGITAL CALIPER

- Resolution: 0.01mm/0.0005"
- Buttons: on/off, zero, mm/inch
- Automatic power on/off
- Data output
- Made of stainless steel

118-012-14

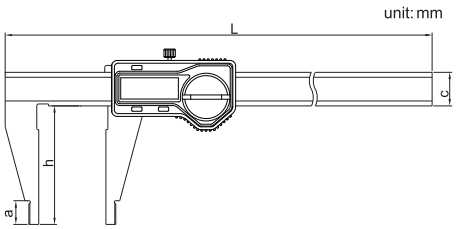

Code	Range	Accuracy	a	c	h
118-008-11	0-200mm/0-8"	±0.03mm	12	17	60
118-012-14	0-300mm/0-12"	±0.04mm	12	17	60
118-012-15	0-300mm/0-12"	±0.04mm	12	17	90

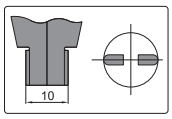

SERIES 118 DIGITAL CALIPER

- Resolution: 0.01mm/0.0005"
- Buttons: on/off, zero, mm/inch, ABS, data preset
- Data output
- Made of stainless steel

118-020-11

Code	Range	Accuracy	a	c	h
118-012-11	0-300mm/0-12"	±0.04mm	18	24	100
118-012-12	0-300mm/0-12"	±0.05mm	18	24	150
118-012-13	0-300mm/0-12"	±0.05mm	18	24	200
118-020-11	0-500mm/0-20"	±0.05mm	18	24	100
118-020-12	0-500mm/0-20"	±0.06mm	18	24	150
118-020-13	0-500mm/0-20"	±0.06mm	18	32	200
118-020-14	0-500mm/0-20"	±0.08mm	18	42	300
118-024-11	0-600mm/0-24"	±0.05mm	18	24	100
118-024-12	0-600mm/0-24"	±0.06mm	18	24	150
118-024-13	0-600mm/0-24"	±0.06mm	18	32	200
118-024-15	0-600mm/0-24"	±0.08mm	18	32	300
118-040-11	0-1000mm/0-40"	±0.08mm	24	32	150
118-040-12	0-1000mm/0-40"	±0.08mm	24	32	200
118-040-13	0-1000mm/0-40"	±0.10mm	24	42	300
118-060-11	0-1500mm/0-60"	±0.11mm	24	42	150
118-080-11	0-2000mm/0-80"	±0.14mm	24	42	150

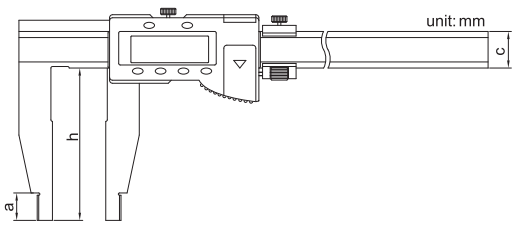

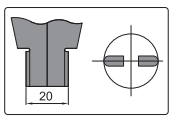

DIGITAL CALIPER SERIES 119

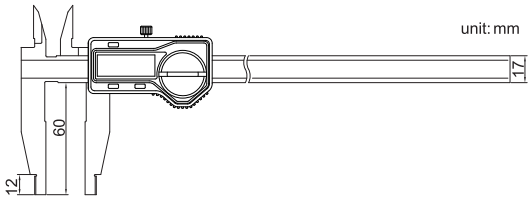

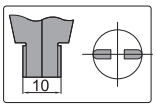

- Resolution: 0.01mm/0.0005"
- Buttons: on/off, zero, mm/inch
- Automatic power on/off
- Data output
- Made of stainless steel

Code	Range	Accuracy
119-012-11	0-300mm/0-12"	±0.04mm

DIGITAL CALIPER SERIES 119

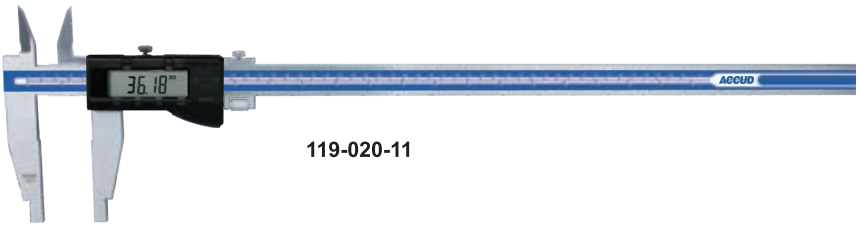

119-020-11

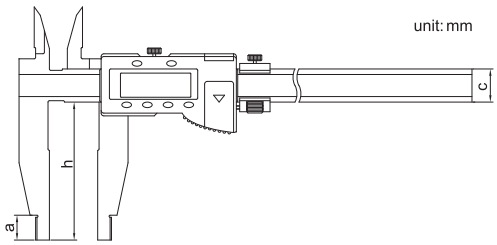

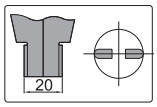

- Resolution: 0.01mm/0.0005"
- Buttons: on/off, zero, mm/inch, ABS, data preset
- Data output
- Made of stainless steel

Code	Range	Accuracy	a	c	h
119-012-12	0-300mm/0-12"	±0.05mm	18	24	100
119-020-11	0-500mm/0-20"	±0.05mm	18	24	100
119-020-12	0-500mm/0-20"	±0.06mm	18	24	150
119-020-13	0-500mm/0-20"	±0.06mm	18	24	200
119-024-11	0-600mm/0-24"	±0.05mm	18	24	100
119-024-12	0-600mm/0-24"	±0.06mm	18	24	150
119-024-14	0-600mm/0-24"	±0.06mm	18	32	200
119-040-11	0-1000mm/0-40"	±0.08mm	24	32	150
119-040-12	0-1000mm/0-40"	±0.08mm	24	32	200
119-060-11	0-1500mm/0-60"	±0.11mm	24	42	150
119-060-12	0-1500mm/0-60"	±0.12mm	24	42	200

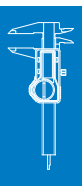

SERIES 150 DIGITAL CALIPER

- Resolution: 0.01mm/0.0005"
- Button function: on/off, zero, mm/inch, ABS, data preset
- Data output
- Made of stainless steel

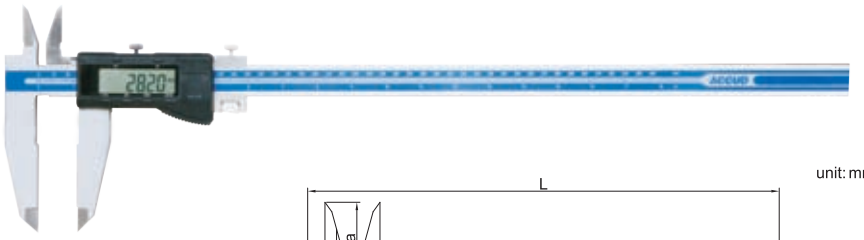

150-018-11

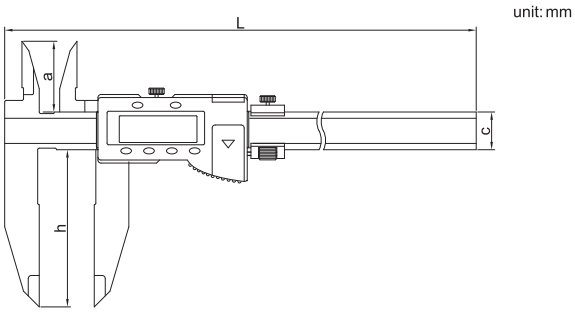

Code	Range	Accuracy	a	c	h	L
150-018-11	0-450mm/0-18"	±0.05mm	45	24	100	610
150-024-11	0-600mm/0-24"	±0.05mm	45	24	100	770
150-040-11	0-1000mm/0-40"	±0.08mm	60	31	150	1220

SERIES 130 DIGITAL CALIPER

- Resolution: 0.01mm/0.0005"
- Buttons: on/off, zero, mm/inch
- Automatic power on/off
- Data output
- Made of stainless steel

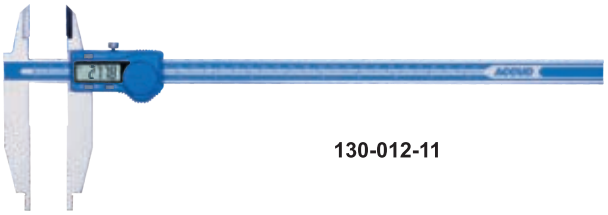

130-012-11

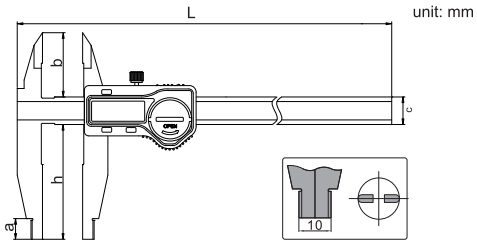

Code	Range	Accuracy	a	b	c	h	L
130-008-11	0-200mm/0-8"	±0.03mm	12	38	17	60	320
130-012-11	0-300mm/0-12"	±0.04mm	12	38	17	60	420
130-012-12	0-300mm/0-12"	±0.04mm	12	38	17	90	420

SERIES 131 DIGITAL CALIPER

- Resolution: 0.01mm/0.0005"
- Buttons: on/off, zero, mm/inch, ABS, data preset
- Data output
- Made of stainless steel

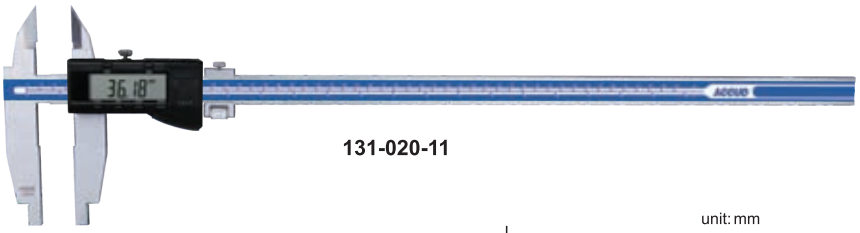

131-020-11

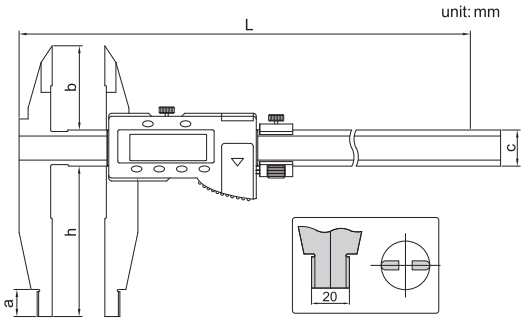

Code	Range	Accuracy	a	b	c	h	L
131-012-11	0-300mm/0-12"	±0.05mm	18	56	24	100	420
131-020-11	0-500mm/0-20"	±0.05mm	18	56	24	100	675
131-020-12	0-500mm/0-20"	±0.06mm	18	56	24	150	675
131-024-11	0-600mm/0-24"	±0.05mm	18	56	24	100	770
131-028-11	0-800mm/0-32"	±0.07mm	24	67	31	150	1025
131-040-11	0-1000mm/0-40"	±0.08mm	24	67	31	150	1220

VERNIER CALIPER SERIES 126

126-040-11

- With fine adjustment
- Made of stainless steel
- Stain chrome reading surface

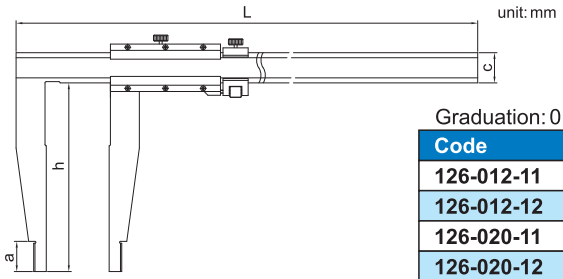

Graduation: 0.02mm/0.001"

Code	Range	Accuracy	a	c	h	w	L
126-012-11	0-300mm/0-12"	±0.05mm	12	17	90	10	410
126-012-12	0-300mm/0-12"	±0.05mm	18	24	150	20	470
126-020-11	0-500mm/0-20"	±0.06mm	18	24	150	20	670
126-020-12	0-500mm/0-20"	±0.06mm	18	24	200	20	670
126-024-11	0-600mm/0-24"	±0.06mm	18	24	150	20	770
126-024-12	0-600mm/0-24"	±0.08mm	24	32	250	20	770
126-040-11	0-1000mm/0-40"	±0.08mm	24	32	200	20	1220
126-040-12	0-1000mm/0-40"	±0.11mm	24	32	300	20	1220
126-120-12	0-3000mm/0-120"	±0.26mm	24	50	300	20	3360

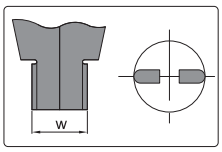

Graduation: 0.05mm/1/128"

Code	Range	Accuracy	a	c	h	w	L
126-020-51	0-500mm/0-20"	±0.08mm	18	24	150	20	670
126-040-51	0-1000mm/0-40"	±0.12mm	24	50	200	20	1330

VERNIER CALIPER SERIES 127

127-020-11

- With fine adjustment
- Made of stainless steel
- Stain chrome reading surface

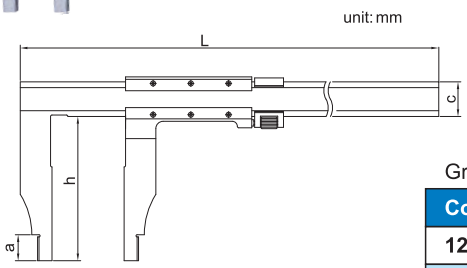

Graduation: 0.02mm/0.001"

Code	Range	Accuracy	a	c	h	w	L
127-012-11	0-300mm/0-12"	±0.05mm	10	20	75	10	410
127-020-11	0-500mm/0-20"	±0.05mm	18	24	100	20	670
127-024-11	0-600mm/0-24"	±0.05mm	18	24	100	20	770
127-040-11	0-1000mm/0-40"	±0.08mm	24	32	140	20	1216
127-060-11	0-1500mm/0-60"	±0.11mm	24	42	180	20	1830
127-080-11	0-2000mm/0-80"	±0.14mm	24	42	200	20	2320

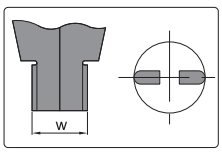

Graduation: 0.05mm/1/128"

Code	Range	Accuracy	a	c	h	w	L
127-024-51	0-600mm/0-24"	±0.08mm	18	24	100	20	770
127-040-51	0-1000mm/0-40"	±0.12mm	24	32	140	20	1216

SERIES 128 VERNIER CALIPER

- Made of stainless steel
- With fine adjustment
- Satin chrome plated reading surface

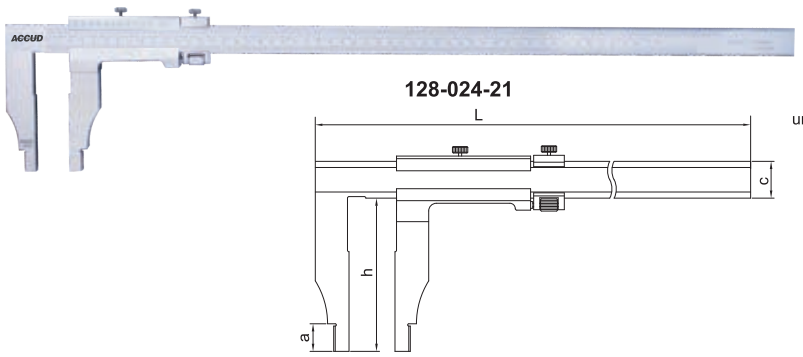

Graduation: 0.02mm/0.001"

Code	Range	Accuracy	a	c	h	w	L
128-024-21	0-600mm/0-24"	±0.06mm	18	24	100	20	770
128-024-22	0-600mm/0-24"	±0.08mm	18	24	150	20	770
128-060-21	0-1500mm/0-60"	±0.11mm	24	42	150	20	1820
128-080-21	0-2000mm/0-80"	±0.14mm	24	42	150	20	2230

Graduation: 0.05mm/1/128"

Code	Range	Accuracy	a	c	h	w	L
128-012-51	0-300mm/0-12"	±0.07mm	18	24	100	20	410
128-012-52	0-300mm/0-12"	±0.07mm	18	24	150	20	410
128-024-51	0-600mm/0-24"	±0.08mm	18	24	100	20	770
128-024-52	0-600mm/0-24"	±0.09mm	18	24	150	20	770
128-032-51	0-800mm/0-32"	±0.09mm	24	31	150	20	1030
128-060-51	0-1500mm/0-60"	±0.16mm	24	42	150	20	1820
128-080-51	0-2000mm/0-80"	±0.20mm	24	42	150	20	2230

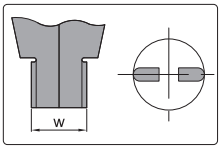

SERIES 129 VERNIER CALIPER

- Made of stainless steel
- With fine adjustment
- Satin chrome plated reading surface

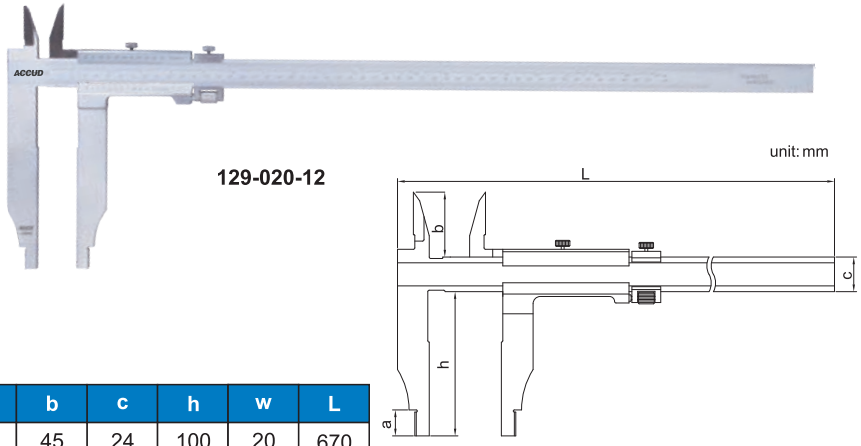

Graduation: 0.02mm/0.001"

Code	Range	Accuracy	a	b	c	h	w	L
129-020-11	0-500mm/0-20"	±0.05mm	18	45	24	100	20	670
129-020-12	0-500mm/0-20"	±0.06mm	18	45	24	150	20	670
129-024-11	0-600mm/0-20"	±0.06mm	18	45	24	100	20	770
129-040-11	0-1000mm/0-40"	±0.08mm	24	60	31	150	20	1230

Graduation: 0.05mm/1/128"

Code	Range	Accuracy	a	b	c	h	w	L
129-020-51	0-500mm/0-20"	±0.07mm	18	45	24	100	20	670
129-020-52	0-500mm/0-20"	±0.08mm	18	45	24	150	20	670
129-024-51	0-600mm/0-20"	±0.08mm	18	45	24	100	20	770
129-040-51	0-1000mm/0-40"	±0.12mm	24	60	31	150	20	1230

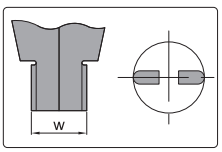

VERNIER CALIPER SERIES 122

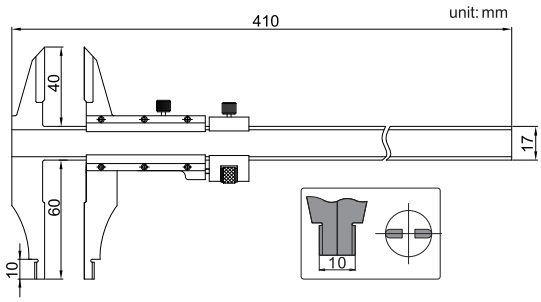

- Graduation: 0.02mm
- With fine adjustment
- Made of stainless steel
- Stain chrome reading surface

Code	Range	Accuracy
122-012-11	300mm	±0.03mm

VERNIER CALIPER SERIES 122

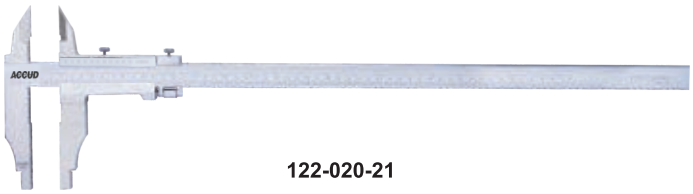

122-020-21

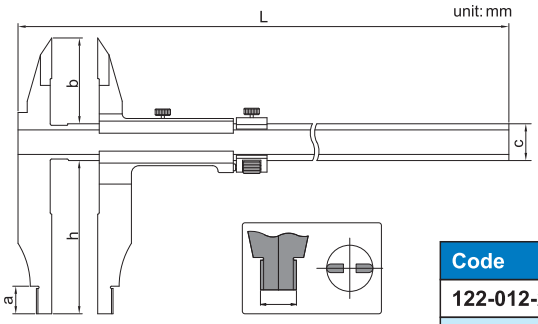

- Graduation: 0.02mm/0.001"
- With fine adjustment
- Made of stainless steel
- Stain chrome reading surface

Code	Range	Accuracy	h	a	b	c	w	L
122-012-21	300mm/12"	±0.05mm	90	12	40	20	10	410
122-020-21	500mm/20"	±0.05mm	100	18	56	24	20	670
122-020-22	500mm/20"	±0.06mm	150	18	56	24	20	670
122-032-21	800mm/32"	±0.07mm	150	24	67	31	20	1020
122-040-21	1000mm/40"	±0.08mm	150	24	67	31	20	1220

133 DIGITAL OUTSIDE NECK CALIPER

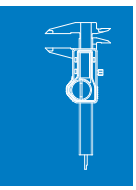

- Measure wall thickness and recesses
- Resolution: 0.01mm/0.0005"
- Automatic power on/off
- Buttons: on/off, zero, mm/inch
- Data output
- Made of stainless steel

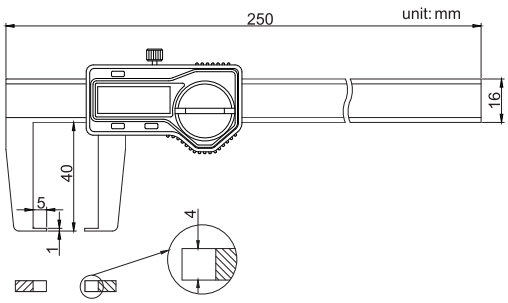

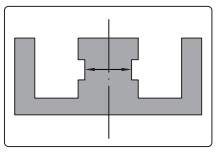

Code	Range	Accuracy
133-006-11	0-150mm/0-6"	±0.04mm

SERIES 143 OUTSIDE NECK VERNIER CALIPER

- Measure wall thickness and recesses
- Made of stainless steel
- Satin chrome plated reading surface

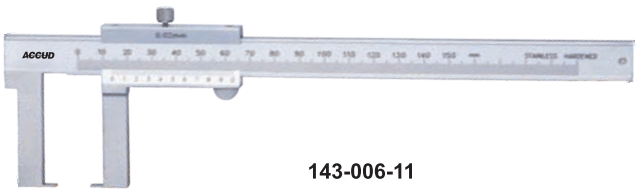

143-006-11

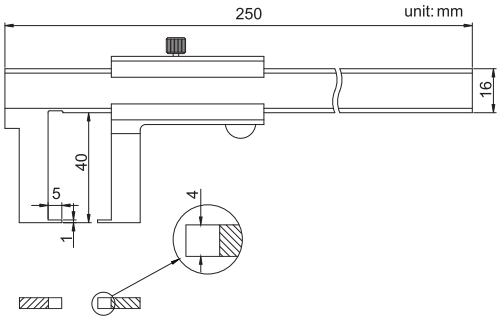

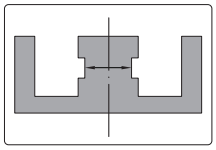

Code	Range	Graduation	Accuracy
143-006-11	0-150mm	0.02mm	±0.04mm
143-006-13	0-150mm	0.05mm	±0.05mm

DIGITAL OUTSIDE POINT CALIPER 134

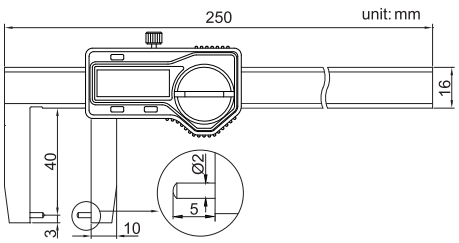

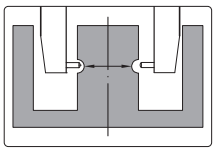

- Measure wall thickness of inside bores and recesses
- Resolution: 0.01mm/0.0005"
- Automatic power on/off
- Buttons: on/off, zero, mm/inch
- Data output
- Made of stainless steel

Code	Range	Accuracy
134-006-11	0-150mm/0-6"	±0.04mm

OUTSIDE POINT VERNIER CALIPER SERIES 144

144-006-11

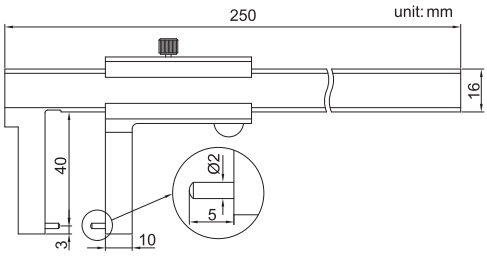

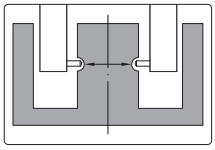

- Measure wall thickness of inside bores and recesses
- Made of stainless steel
- Satin chrome plated reading surface

Code	Range	Graduation	Accuracy
144-006-11	0-150mm	0.02mm	±0.04mm
144-006-13	0-150mm	0.05mm	±0.05mm

SERIES 135 DIGITAL INSIDE NECK CALIPER

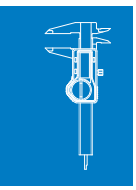

- Measure the grooves
- Resolution: 0.01mm/0.0005"
- Automatic power on/off
- Buttons: on/off, zero, mm/inch
- Data output
- Made of stainless steel

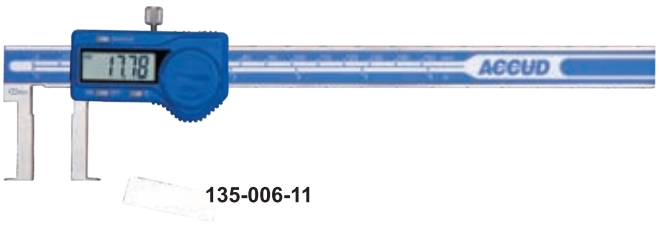

135-006-11

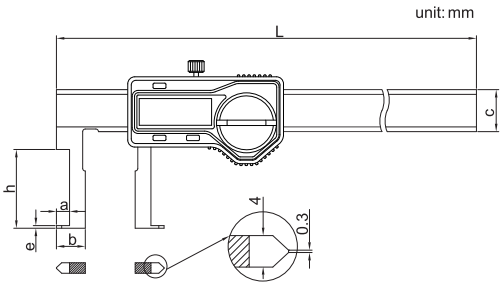

Code	Range	Accuracy	a	b	c	e	h	L
135-006-11	22-150mm	±0.04mm	5	11	16	1	30	250
135-008-11	25-200mm	±0.04mm	5	12.5	16	1	40	310
135-012-11	30-300mm	±0.05mm	5	15	17	1.5	50	410

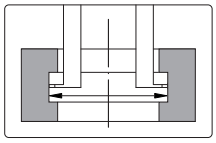

SERIES 145 INSIDE NECK VERNIER CALIPER

- Measure the grooves
- Made of stainless steel
- Satin chrome plated reading surface

145-006-13

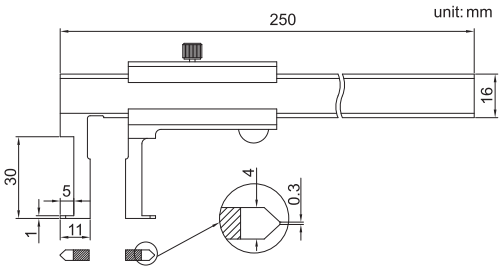

Code	Range	Graduation	Accuracy
145-006-11	22-150mm	0.02mm	±0.04mm
145-006-13	22-150mm	0.05mm	±0.05mm

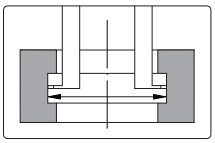

DIGITAL INSIDE POINT CALIPER

SERIES 136

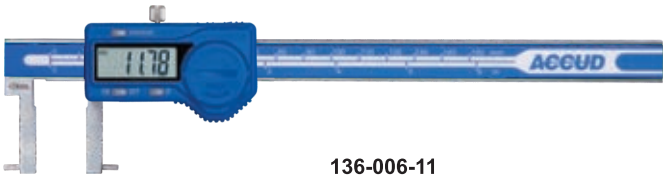

136-006-11

- Measure the grooves
- Resolution: 0.01mm/0.0005"
- Automatic power on/off
- Buttons: on/off, zero, mm/inch
- Data output
- Made of stainless steel

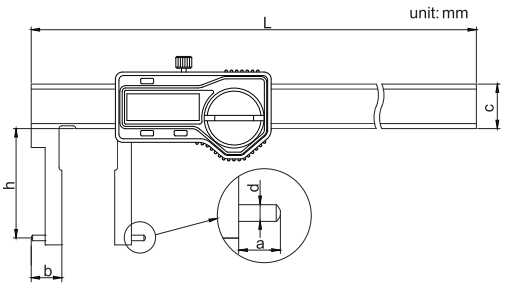

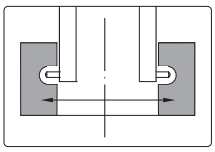

Code	Range	Accuracy	a	b	c	d	h	L
136-006-11	24-150mm	±0.04mm	5	12	16	Ø2	30	250
136-008-11	25-200mm	±0.04mm	5	12.5	16	Ø2	40	310
136-012-11	50-300mm	±0.06mm	8	25	17	Ø3	80	410

INSIDE POINT VERNIER CALIPER

SERIES 146

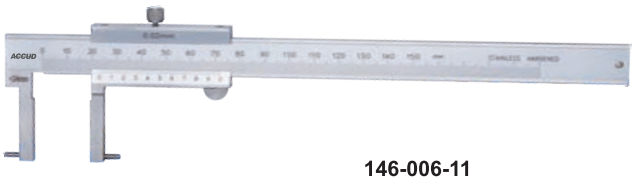

146-006-11

- Measure the grooves
- Made of stainless steel
- Satin chrome plated reading surface

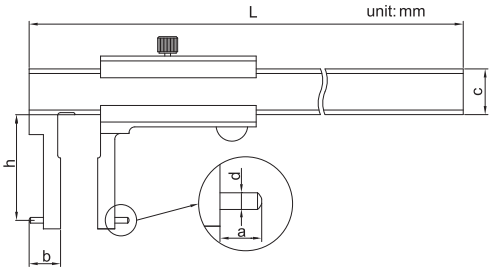

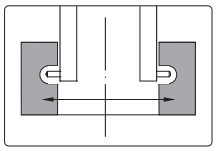

Code	Range	Graduation	Accuracy	a	b	c	d	h	L
146-006-11	24-150mm	0.02mm	±0.04mm	5	12	16	Ø2	30	250
146-012-11	50-300mm	0.02mm	±0.06mm	8	25	17	Ø3	80	410
146-006-13	24-150mm	0.05mm	±0.05mm	5	12	16	Ø2	30	250
146-012-13	50-300mm	0.05mm	±0.08mm	8	25	17	Ø3	80	410

132 DIGITAL INSIDE GROOVE CALIPER

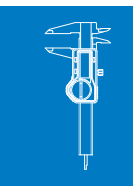

- Measure diameter of grooves inside small bores
- Resolution: 0.01mm/0.0005"
- Buttons: on/off, zero, mm/inch
- Automatic power on/off
- Data output
- Made of stainless steel

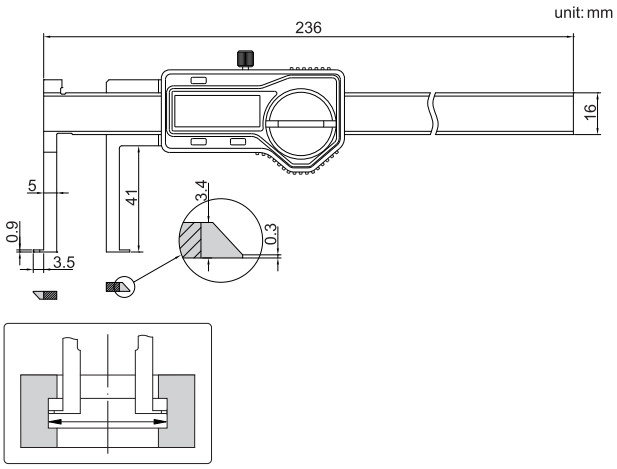

Code	Range	Accuracy
132-006-21	11-150mm/0.43-6"	±0.04mm

132 DIGITAL INSIDE GROOVE CALIPER

- Measure diameter of grooves inside bores
- Resolution: 0.01mm/0.0005"
- Automatic power on/off
- Buttons: on/off, zero, mm/inch
- Data output
- Made of stainless steel

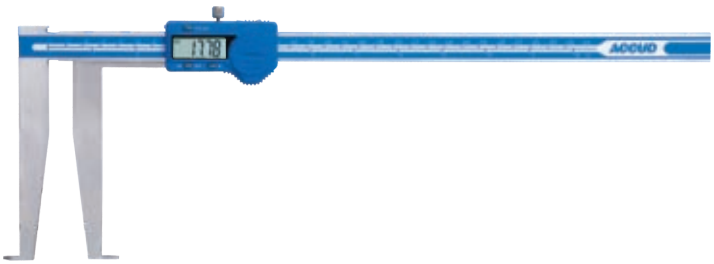

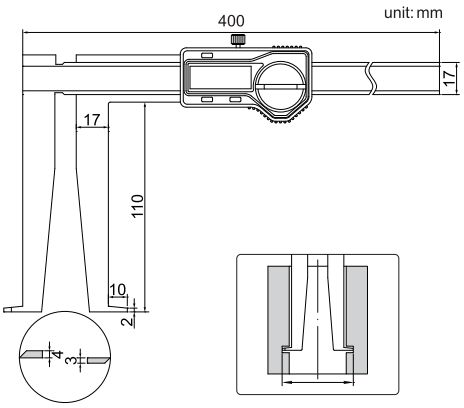

bore sizes to be measured

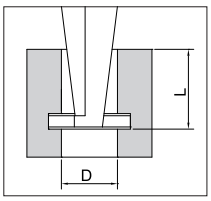

(mm)

D	L
Ø25	<50
Ø26	<60
Ø27~300	<110

Code	Range	Accuracy
132-012-11	25-300mm	±0.05mm

DIGITAL INSIDE KNIFE-EDGE CALIPER

SERIES 139

139-006-11

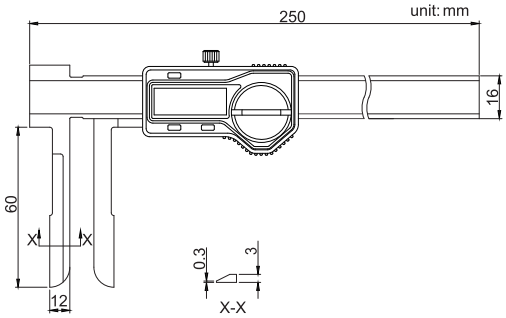

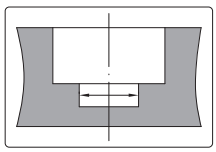

- Measure the diameter of deep holes or grooves
- Resolution: 0.01mm/0.0005"
- Automatic power on/off
- Buttons: on/off, zero, mm/inch
- Data output
- Made of stainless steel

Code	Range	Accuracy
139-006-11	15-150mm	±0.05mm
139-008-11	20-200mm	±0.05mm

DIGITAL INSIDE GROOVE CALIPER

SERIES 159

159-006-11

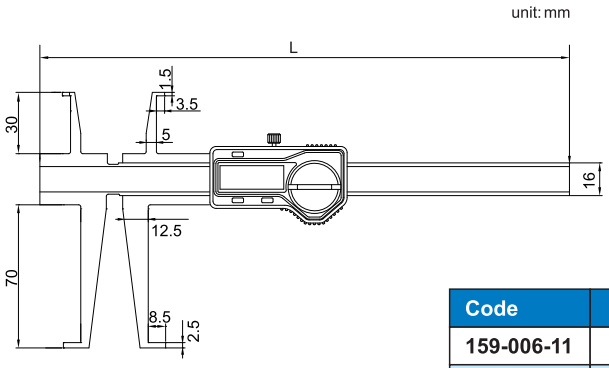

- Measure diamter of grooves inside bores
- Resolution: 0.01mm/0.0005"
- Buttons: on/off, zero, mm/inch
- Automatic power on/off
- Data output
- Made of stainless steel

Code	Accuracy	Range of upper Jaw	Range of lower Jaw	L
159-006-11	±0.04mm	9-150mm	15-150mm	260
159-008-11	±0.06mm	9-200mm	15-200mm	310

149 DIGITAL CALIPER WITH INTERCHANGEABLE POINTS

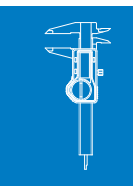

- Supplied with 4 pairs of points and zero setting block for external measurement
- Resolution: 0.01mm/0.0005"
- Buttons: on/off, zero, mm/inch
- Automatic power on/off
- Data output
- Made of stainless steel

unit: mm

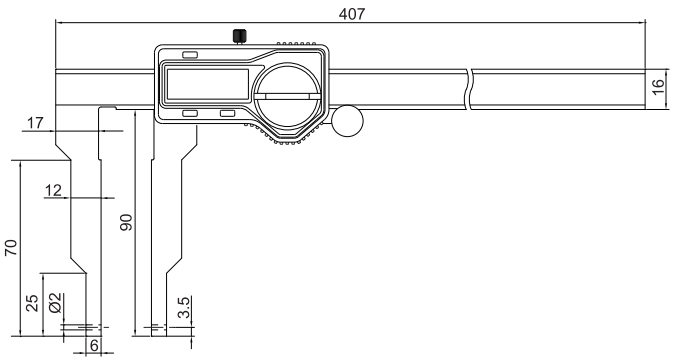

short spherical/flat points

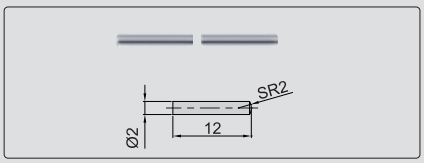

long spherical/flat points

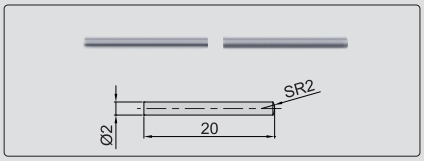

short spherical blade points

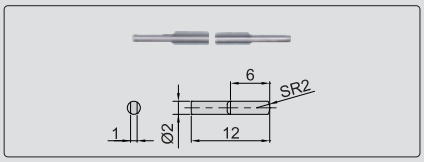

long spherical blade points

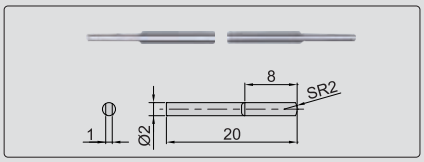

measure internal and external grooves

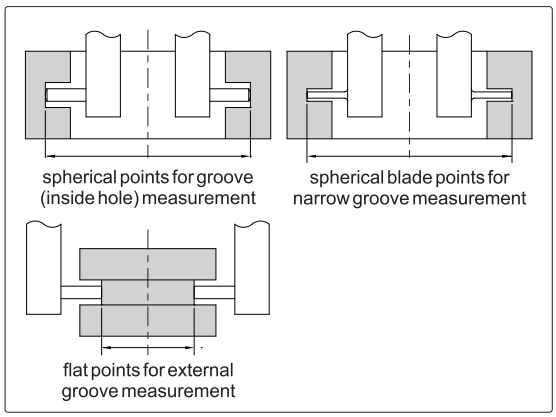

install points

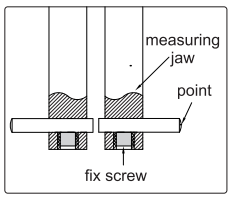

zero setting block for external measurement (included)

Code	Point	Range	Accuracy	Application
149-012-11	**short spherical/ flat points**	24-324mm/1-12.7"(internal) 0-288mm/0-11.3"(external)	±0.04mm	spherical points for grooves inside hole (small hole) flat points for external grooves
	long spherical/ flat points	40-340mm/1.5-13.3"(internal) 0-272mm/0-10.7"(external)	±0.04mm	spherical points for grooves inside hole (large hole) flat points for external grooves
	short spherical blade points	24-324mm/1-12.7"(internal) 0-288mm/0-11.3"(external)	±0.04mm	for narrow grooves (small hole)
	long spherical blade points	40-340mm/1.5-13.3"(internal) 0-272mm/0-10.7"(external)	±0.04mm	for narrow grooves (large hole)

DIGITAL POINT CALIPER 138

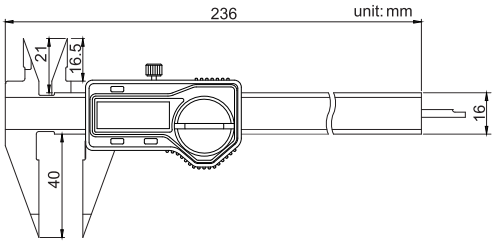

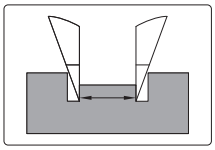

- Measure small holes or grooves
- Resolution: 0.01mm/0.0005"
- Automatic power on/off
- Buttons: on/off, zero, mm/inch
- Data output
- Made of stainless steel

Code	Range	Accuracy
138-006-11	0-150mm/0-6"	±0.03mm

DIGITAL SMALL POINT CALIPER 168

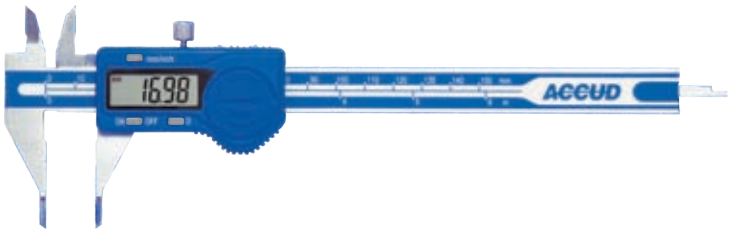

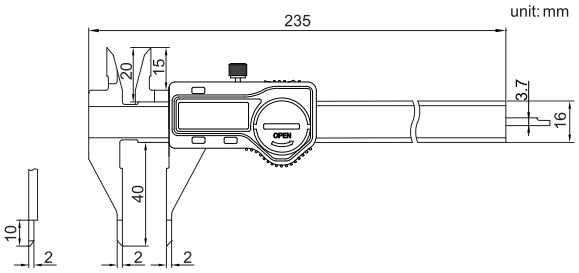

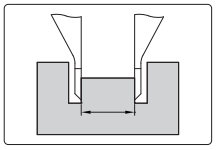

- Small point jaws fits into small grooves and recesses
- Resolution: 0.01mm/0.0005"
- Buttons: on/off, zero, mm/inch
- Automatic power on/off
- Data output
- Made of stainless steel

Code	Range	Accuracy
168-006-11	0-150mm/0-6"	±0.03mm

SERIES 151 DIGITAL OFFSET CENTERLINE CALIPER

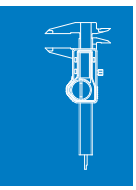

- Measure the hole center-to-center distance in same plane, or between offset planes
- Resolution: 0.01mm/0.0005"
- Automatic power on/off
- Buttons: on/off, zero, mm/inch
- Data output
- Made of stainless steel

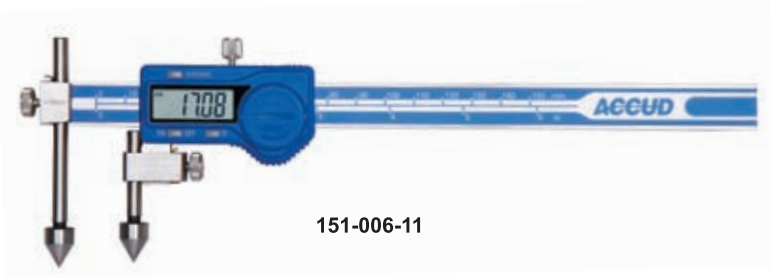

151-006-11

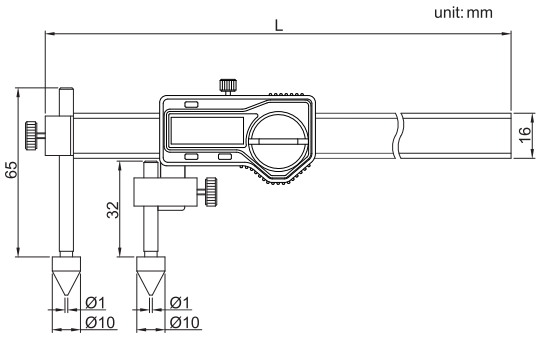

Code	Range	Accuracy	L
151-006-11	10-150mm	±0.05mm	236
151-008-11	10-200mm	±0.07mm	246
151-012-11	10-300mm	±0.09mm	396

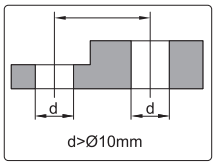

SERIES 161 OFFSET CENTERLINE VERNIER CALIPER

- Measure the hole center-to-center distance in same plane, or between offset planes
- Made of stainless steel
- Stain chrome plated reading surface

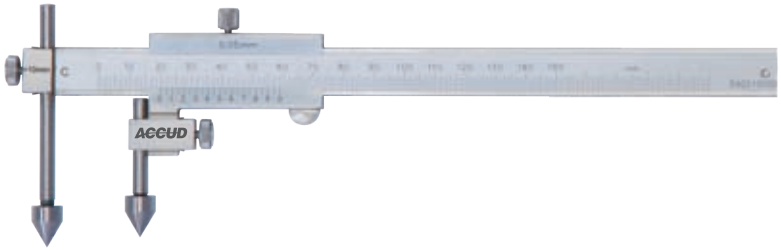

161-006-13

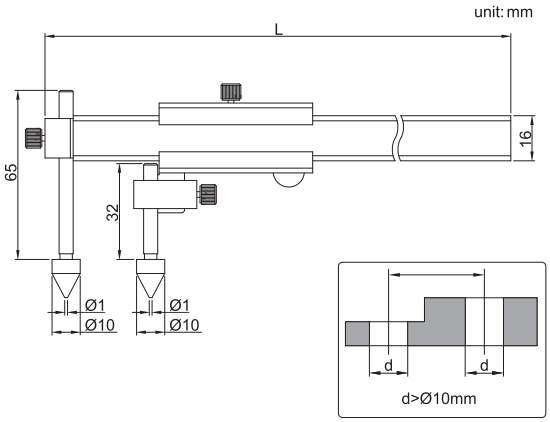

Code	Range	Graduation	Accuracy	L
161-006-11	10-150mm	0.02mm	±0.05mm	236
161-008-11	10-200mm	0.02mm	±0.07mm	306
161-012-11	10-300mm	0.02mm	±0.09mm	396
161-006-13	10-150mm	0.05mm	±0.05mm	236
161-008-13	10-200mm	0.05mm	±0.07mm	306
161-012-13	10-300mm	0.05mm	±0.09mm	396

DIGITAL TUBE THICKNESS CALIPER 137

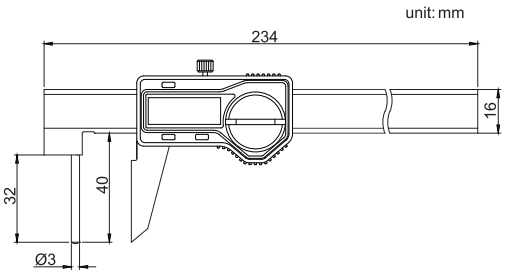

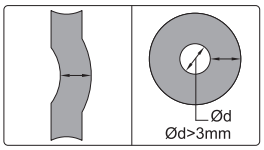

- Measure the wall thickness
- Resolution: 0.01mm/0.0005"
- Automatic power on/off
- Buttons: on/off, zero, mm/inch
- Data output
- Made of stainless steel

Code	Range	Accuracy
137-006-11	0-150mm/0-6"	±0.05mm

DIGITAL BACK–JAW CENTERILINE CALIPER SERIES 141

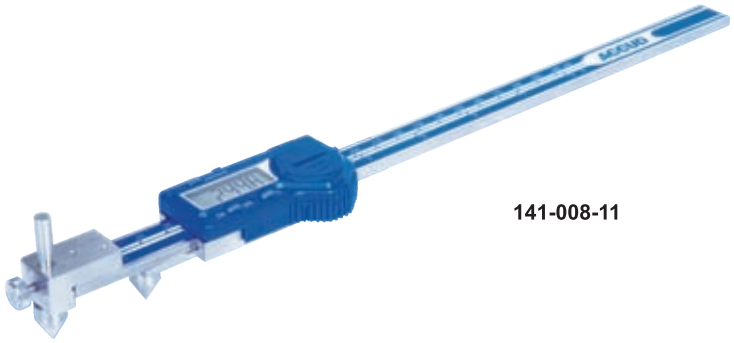

141-008-11

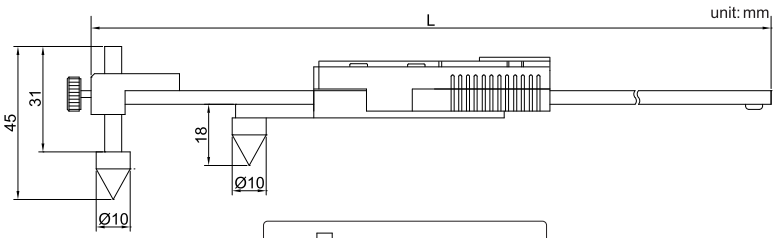

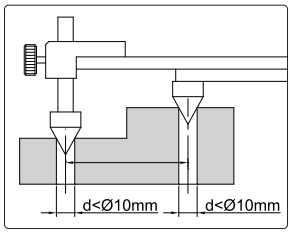

- Measure hole center distance in the same or offset planes
- Resolution: 0.01mm/0.0005"
- Buttons: on/off, zero, mm/inch
- Data output
- Automatic power on/off
- Made of stainless steel

Code	Range	Accuracy	L
141-008-11	10-200mm/0.4-8"	±0.1mm	310
141-012-11	10-300mm/0.4-12"	±0.1mm	410

SERIES 147 BACK–JAW DIGITAL EDGE TO CENTER CALIPER

- Measure edge to hole center distance
- Resolution: 0.01mm/0.0005"
- Buttons: on/off, zero, mm/inch
- Data output
- Automatic power on/off
- Made of stainless steel

147-008-11

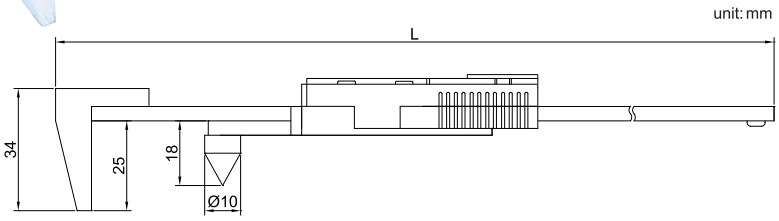

measure edge to hole center distance

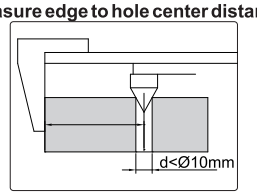

Code	Range	Accuracy	L
147-008-11	5-200mm/0.2-8"	±0.1mm	310mm
147-012-11	5-300mm/0.2-12"	±0.1mm	410mm

SERIES 148 DIGITAL CENTERLINE/EDGE TO CENTER CALIPER

- Measure hole center distance or edge to hole center distance
- Resolution: 0.01mm/0.0005"
- Buttons: on/off, zero, mm/inch
- Data output
- Automatic power on/off
- Made of stainless steel

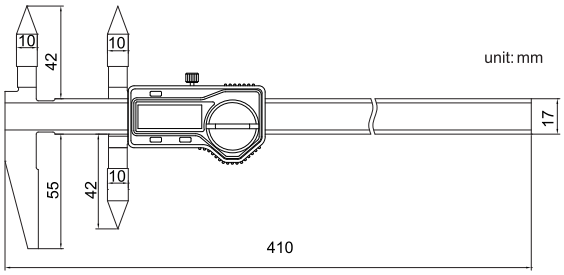

measure edge to hole center distance

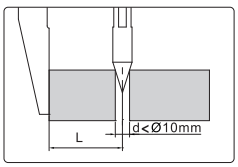

measure hole center distance

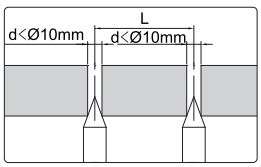

Code	Range of upper jaw (center to center)	Range of lower jaw (edge to center)	Accuracy
148-012-11	10-300mm/0.4-12"	5-300mm/0.2-12"	±0.08mm

DIGITAL OFFSET CALIPER

SERIES 152

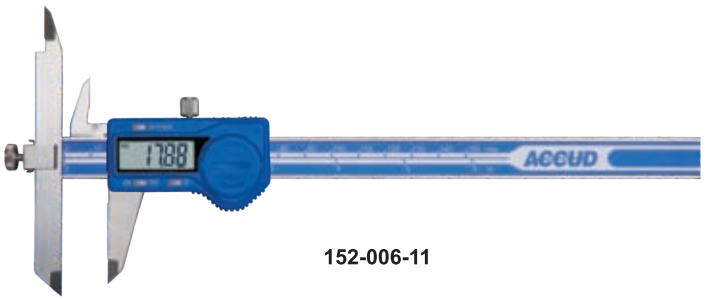

152-006-11

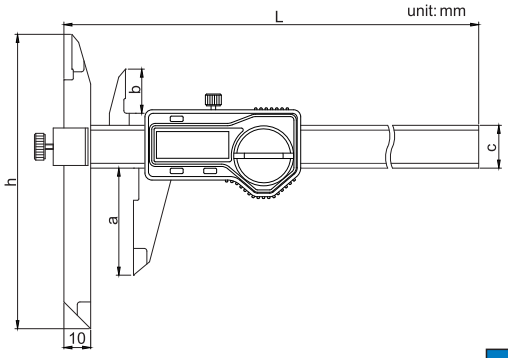

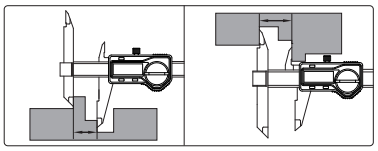

- Adjust the beam-mounted jaw to facilitate measurement of stepped sections and hard-to reach workpiece
- Resolution: 0.01mm/0.0005"
- Automatic power on/off
- Buttons: on/off, zero, mm/inch
- Data output
- Made of stainless steel

Code	Range	Accuracy	a	b	c	h	L
152-006-11	0-150mm/0-6"	±0.04mm	40	16.5	16	110	239
152-008-11	0-200mm/0-8"	±0.04mm	50	19.5	16	120	289
152-012-11	0-300mm/0-12"	±0.05mm	60	20.5	17	130	389

DIGITAL BLADE CALIPER

SERIES 153

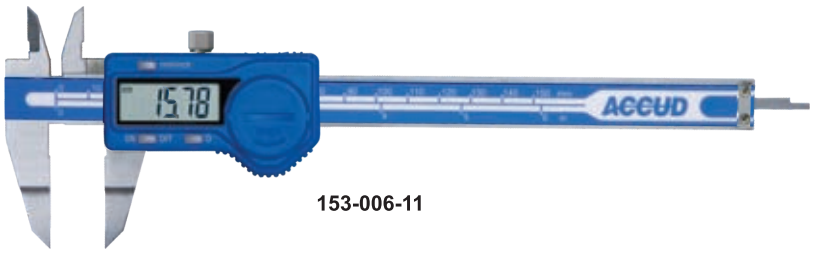

153-006-11

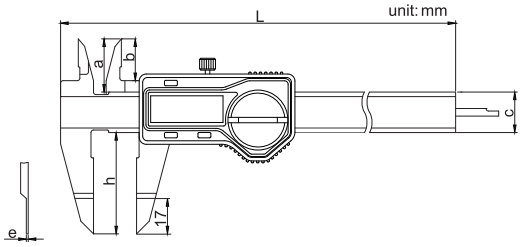

- Measure small grooves
- Resolution: 0.01mm/0.0005"
- Automatic power on/off
- Buttons: on/off, zero, mm/inch
- Data output
- Made of stainless steel

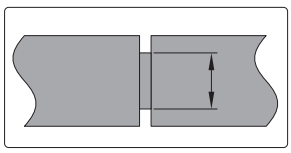

Code	Range	Accuracy	a	b	c	h	e	L
153-006-11	0-150mm/0-6"	±0.03mm	21	16	16	40	0.75	235
153-008-11	0-200mm/0-8"	±0.03mm	24	19	16	50	0.75	297
153-012-11	0-300mm/0-12"	±0.04mm	26	20.5	16	60	1.00	390

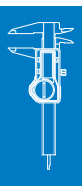

SERIES 154 DIGITAL HOOK CALIPER

- Measure width of groove inside bores
- Resolution: 0.01mm/0.0005"
- Buttons: on/off, zero, mm/inch
- Automatic power on/off
- Data output
- Made of stainless steel

154-005-11

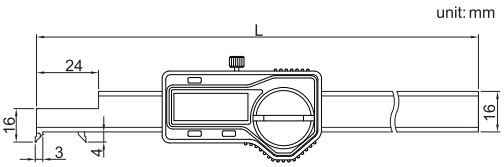

Code	Range	Accuracy	L
154-005-11	3-125mm	±0.04mm	250mm
154-008-11	3-200mm	±0.04mm	310mm

SERIES 155 DIGITAL SCRIBING CALIPER

- Carbide -tipped jaws facilitate fine scribing on workpiece
- Resolution: 0.01mm/0.0005"
- Automatic power on/off
- Buttons: on/off, zero, mm/inch
- Data output
- Made of stainless steel

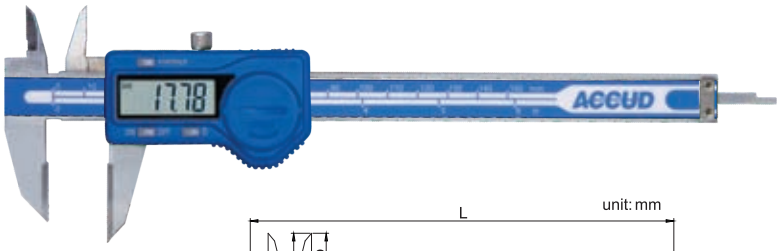

155-006-11

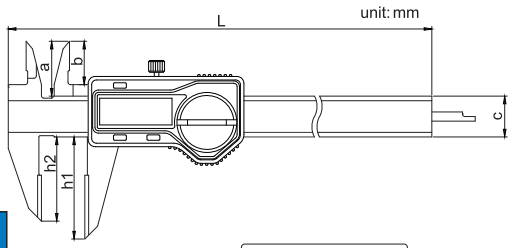

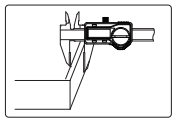

Code	Range	Accuracy	a	b	c	h1	h2	L
155-006-11	0-150mm/0-6"	±0.03mm	21	16.5	16	40	33	236
155-008-11	0-200mm/0-8"	±0.03mm	24	19.5	16	50	43	286
155-012-11	0-300mm/0-12"	±0.04mm	25	20.5	17	60	53	386

SERIES 169 DIGITAL ARC RADIUS CALIPER

- Measure the radius of arc less than half round
- Resolution: 0.01mm/0.0005"
- Buttons: on/off, zero, mm/inch
- Automatic power on/off
- Data output
- Made of stainless steel

169-006-11

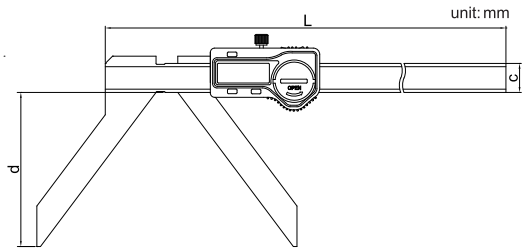

Code	Range (R)	Accuracy	c	d	L
169-006-11	5-150mm/0.2-6"	±0.05mm	16	65	263
169-008-11	5-200mm/0.2-8"	±0.07mm	16	85	313

DIGITAL CALIPER WITH LARGE MEASURING FACES

167

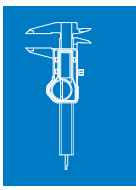

- Measure diameter of wire ropes, and thickness of soft materials like rubber, etc.
- Resolution: 0.01mm/0.0005"
- Buttons: on/off, zero, mm/inch
- Automatic power on/off
- Data output
- Made of stainless steel

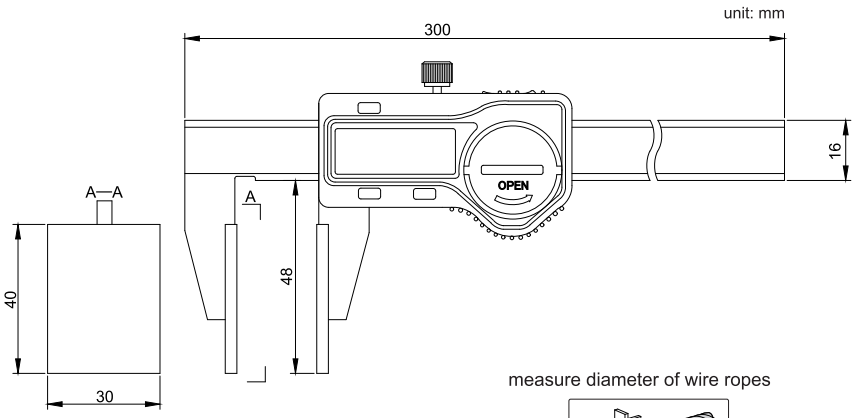

measure diameter of wire ropes

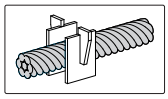

Code	Range	Accuracy
167-008-11	0-200mm/0-8"	±0.07mm

DIGITAL RTJ RING GROOVE CALIPER

SERIES 142

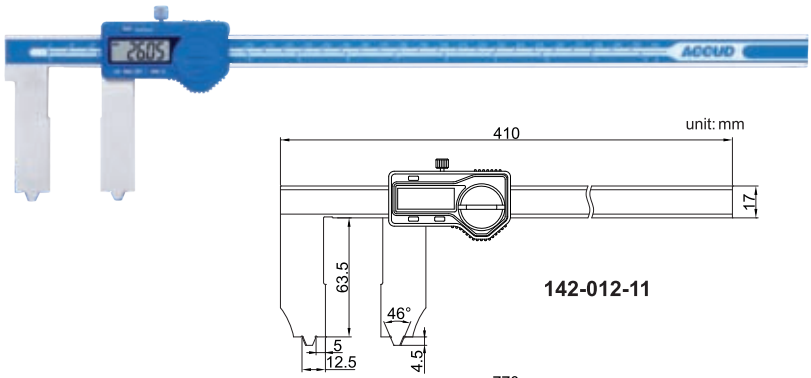

142-012-11

- Measure ring grooves of flange
- Resolution: 0.01mm/0.0005"
- Automatic power on/off
- Buttons: on/off, zero, mm/inch
- Data output
- Made of stainless steel

measure outside diameter of RTJ ring groove

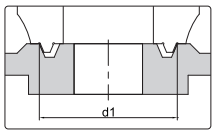

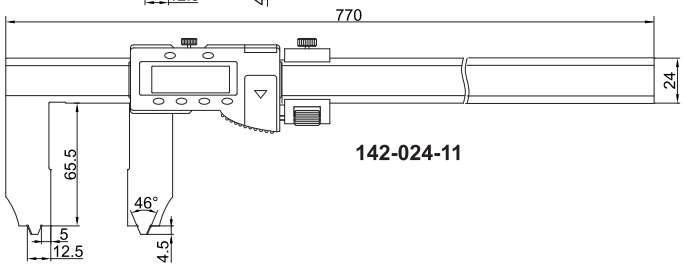

142-024-11

measureinsidediameter ofRTJringgroove

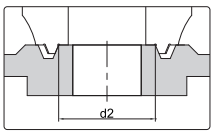

Code	Range (inside diameter of RTJ ring groove)	Range (outside diameter of RTJ ring groove)	Angle of RTJ ring groove	Accuracy
142-012-11	10-300mm/0.4-12"	25-300mm/1-12"	23°	±0.06mm
142-024-11	10-600mm/0.4-24"	25-600mm/1-24"	23°	±0.07mm

157 DIGITAL DISK BRAKE CALIPER

- Measure thickness of disk brakes
- Resolution: 0.01mm/0.0005"
- Buttons: on/off, zero, mm/inch
- Automatic power on/off
- Data output
- Made of stainless steel

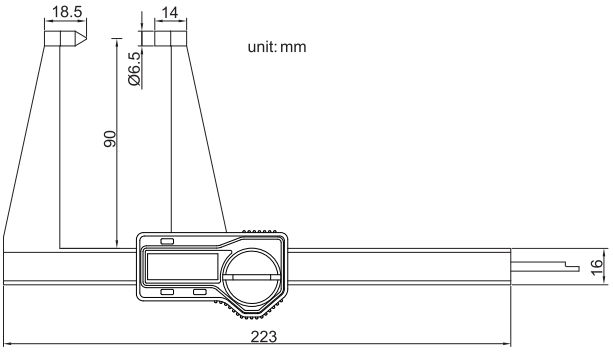

Code	Range	Accuracy
157-005-11	0-125mm/0-5"	±0.05mm

158 DIGITAL DRUM BRAKE CALIPER

- Measure internal and external diameter of drum brakes
- Resolution 0.01mm/0.0005"
- Buttons: on/off, zero, mm/inch
- Automatic power on/off
- Data output
- Made of stainless steel

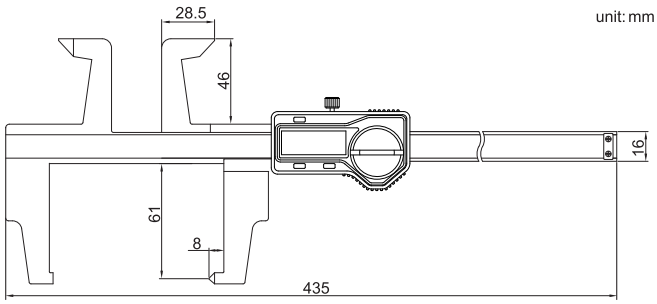

Code	Range	Accuracy
158-012-11	0-300mm/0-12"	±0.07mm

DIGITAL GEAR TOOTH CALIPER

SERIES 156

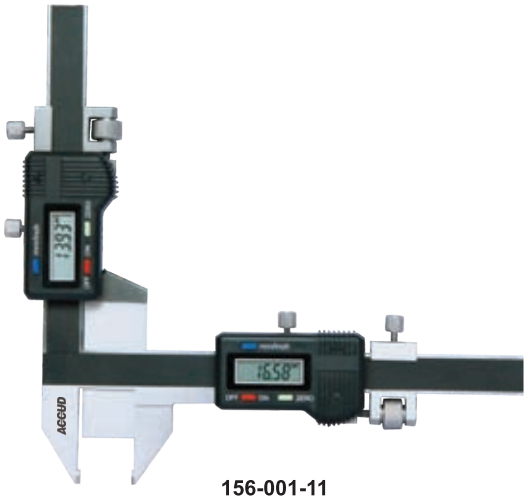

156-001-11

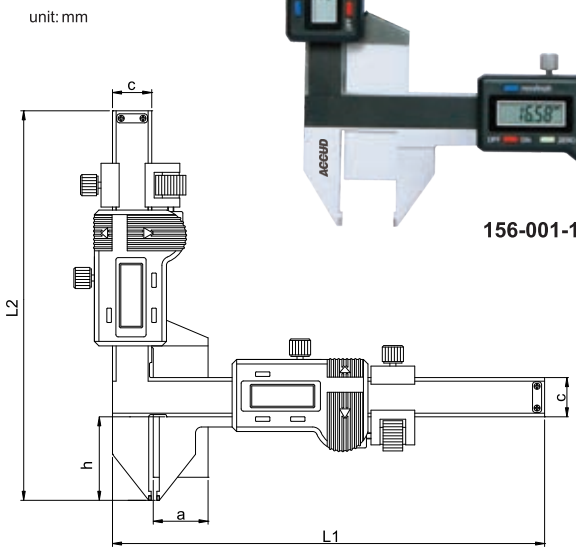

- Resolution: 0.01mm/0.0005"
- Buttons: on/off, zero, mm/inch
- Made of stainless steel

Code	Range	Accuracy	L1	L2	a	c	h
156-001-11	M1-25mm	±0.04mm	156	156	12.5	13	32
156-002-11	M5-50mm	±0.04mm	220	190	50.5	16	55

VERNIER GEAR TOOTH CALIPER

166

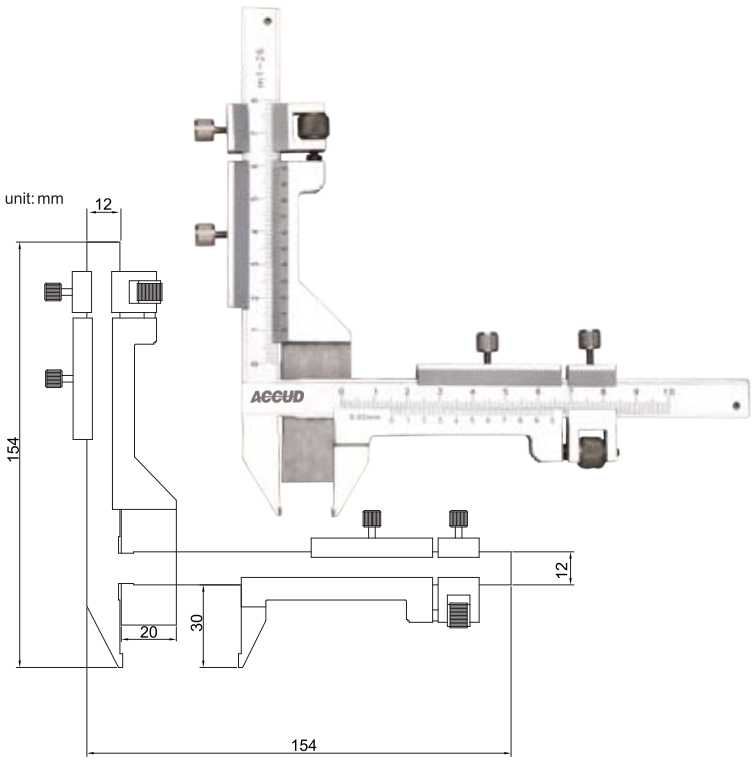

- Graduation: 0.02mm

Code	Range	Accuracy
166-001-11	M1-26mm	±0.04mm

SERIES 171 DIGITAL DEPTH CALIPER

- Resolution: 0.01mm/0.0005"
- Automatic power on/off
- Buttons: on/off, zero, mm/inch
- Data output
- Made of stainless steel

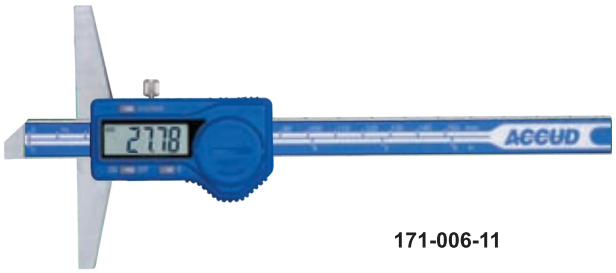

171-006-11

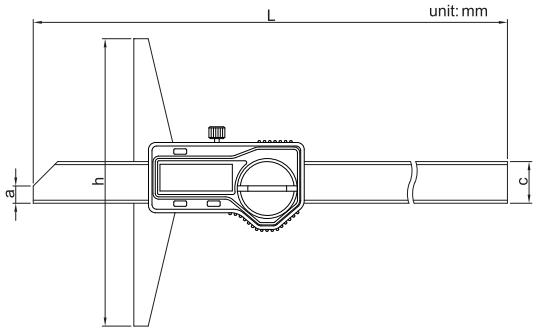

Code	Range	Accuracy	a	c	h	L
171-006-11	0-150mm/0-6"	±0.03mm	6	14.5	100	230
171-008-11	0-200mm/0-8"	±0.03mm	6	14.5	100	280
171-012-11	0-300mm/0-12"	±0.04mm	6	14.5	150	380
171-020-11	0-500mm/0-20"	±0.05mm	7	15	150	585

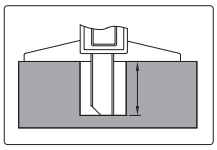

172 DIGITAL PIN DEPTH CALIPER

- Measure the depth of small holes or grooves
- Resolution: 0.01mm/0.0005"
- Automatic power on/off
- Buttons: on/off, zero, mm/inch
- Data output
- Made of stainless steel

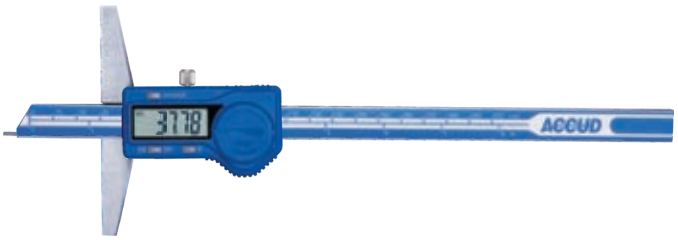

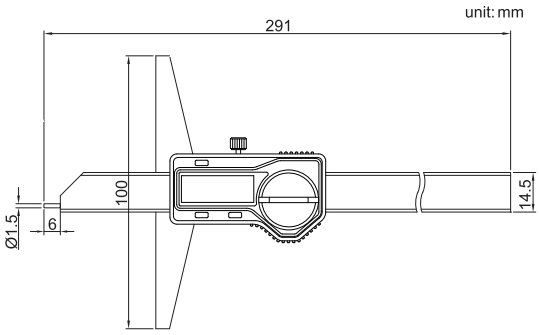

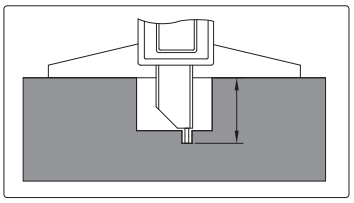

Code	Range	Accuracy
172-008-11	0-200mm/0-8"	±0.03mm

DIGITAL HOOK DEPTH CALIPER

SERIES 173

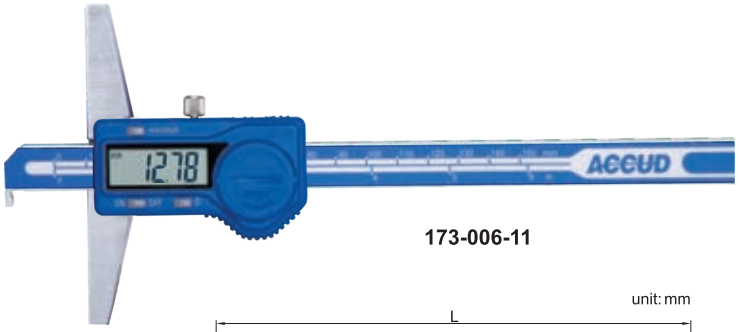

173-006-11

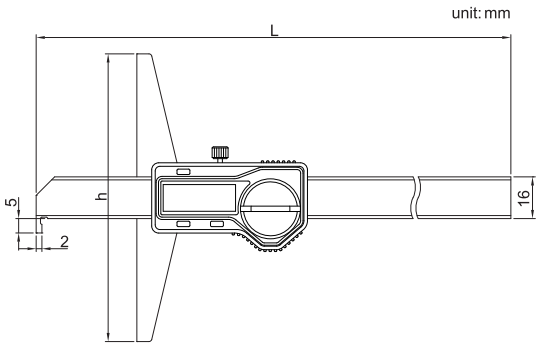

- Measure the depth of grooves
- Resolution: 0.01mm/0.0005"
- Automatic power on/off
- Buttons: on/off, zero, mm/inch
- Data output
- Made of stainless steel

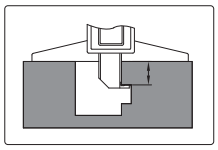

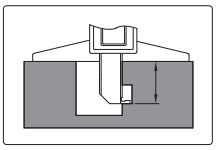

Code	Range	Accuracy	h	L
173-006-11	0-150mm/0-6"	±0.04mm	100	230
173-008-11	0-200mm/0-8"	±0.04mm	100	280
173-012-11	0-300mm/0-12"	±0.05mm	150	380

DIGITAL DOUBLE HOOK DEPTH CALIPER

SERIES 174

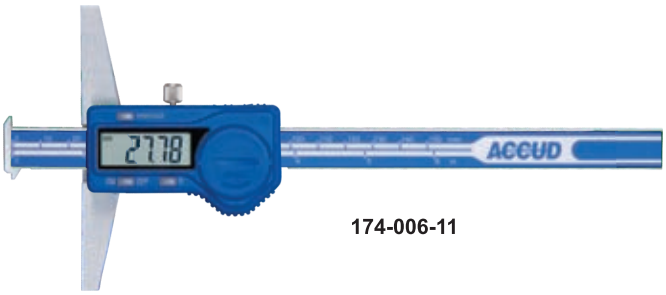

174-006-11

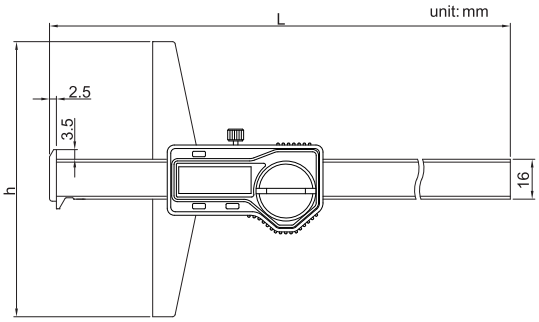

- Measure the depth of grooves
  Resolution: 0.01mm/0.0005"
- Automatic power on/off
- Buttons: on/off, zero, mm/inch
- Data output
- Made of stainless steel

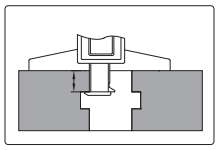

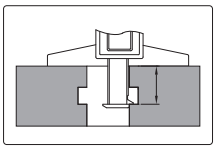

Code	Range	Accuracy	h	L
174-006-11	0-150mm/0-6"	±0.03mm	100	233
174-008-11	0-200mm/0-8"	±0.03mm	100	283
174-012-11	0-300mm/0-12"	±0.04mm	150	383

SERIES 191 — DIGITAL DEPTH CALIPER WITH HOLES

- With hole, for mounting the extension base
- Resolution: 0.01mm/0.0005"
- Buttons: on/off, zero, mm/inch
- Automatic power on/off
- Data output
- Made of stainless steel

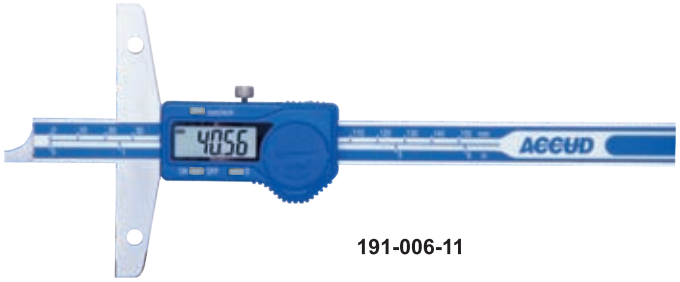

191-006-11

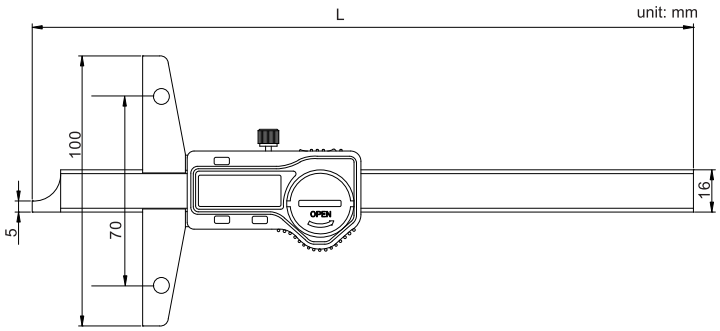

Code	Range	Accuracy	L
191-006-11	0-150mm/0-6"	±0.03mm	237
191-008-11	0-200mm/0-8"	±0.03mm	287
191-012-11	0-300mm/0-12"	±0.04mm	403

SERIES 179 — DIAL DEPTH CALIPER

- Shockproof dial indicator
- Graduation: 0.02mm
- Made of stainless steel

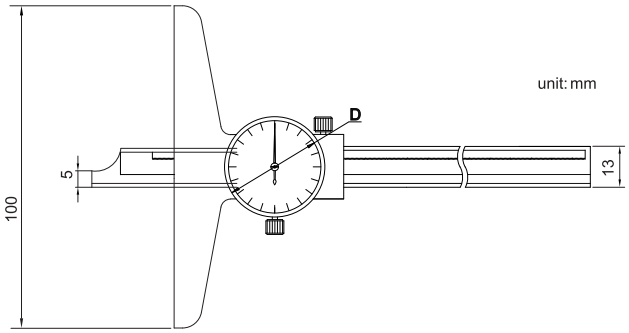

Code	Range	Accuracy	D
179-006-21	0-150mm	±0.03mm	Ø39
179-008-21	0-200mm	±0.03mm	Ø39
179-012-21	0-300mm	±0.04mm	Ø44

VERNIER DEPTH CALIPER SERIES 177

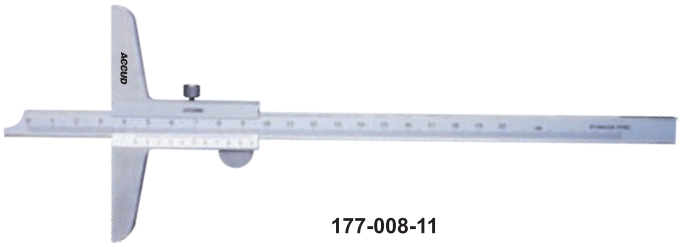

177-008-11

- Graduation: 0.02mm
- Made of stainless steel
- Satin chrome plated reading surface

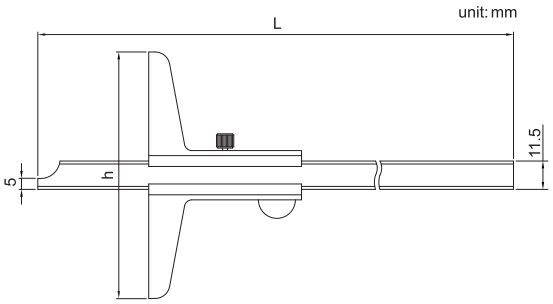

Code	Range	Accuracy	h	L
177-006-11	0-150mm	±0.03mm	100	245
177-008-11	0-200mm	±0.03mm	100	282
177-012-11	0-300mm	±0.04mm	100	382
177-020-11	0-500mm	±0.05mm	150	585

VERNIER DEPTH CALIPER SERIES 175

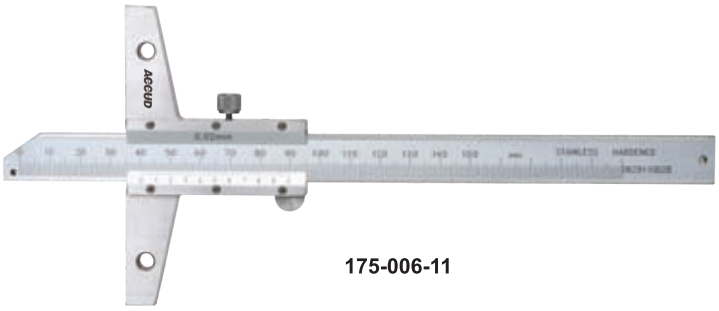

175-006-11

- Made of stainless steel
- Satin chrome plating finish on reading surface
- Optional accessory: extension base

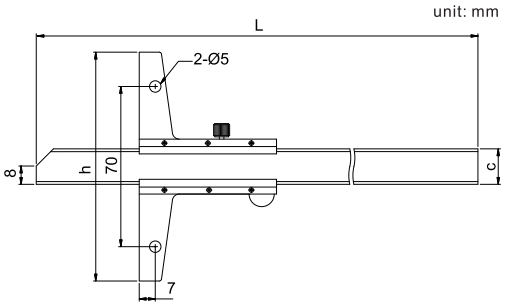

Code	Range	Graduation	Accuracy	c	h	L
175-006-11	0-150mm	0.02mm	±0.03mm	16	100	240
175-008-11	0-200mm	0.02mm	±0.03mm	16	100	290
175-012-11	0-300mm	0.02mm	±0.04mm	16	100	390
175-024-11	0-600mm	0.02mm	±0.05mm	16	150	704
175-040-11	0-1000mm	0.02mm	±0.07mm	18	200	1124
175-006-13	0-150mm	0.05mm	±0.05mm	16	100	240
175-008-13	0-200mm	0.05mm	±0.05mm	16	100	290
175-012-13	0-300mm	0.05mm	±0.08mm	16	100	390
175-024-13	0-600mm	0.05mm	±0.10mm	16	150	704
175-040-13	0-1000mm	0.05mm	±0.15mm	18	200	1124

SERIES 178 VERNIER DEPTH CALIPER

- With fine adjustment
- Made of stainless steel
- Satin chrome plating finish on reading surface
- Optional accessory: extension base

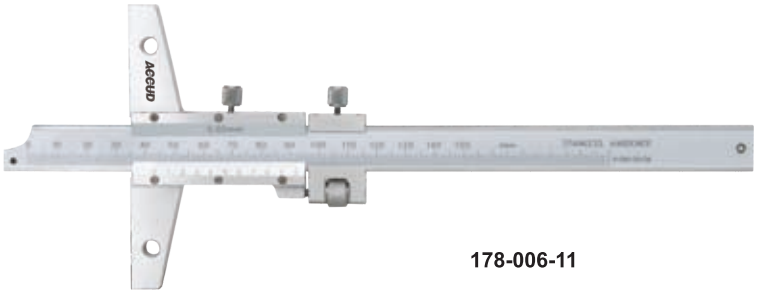

178-006-11

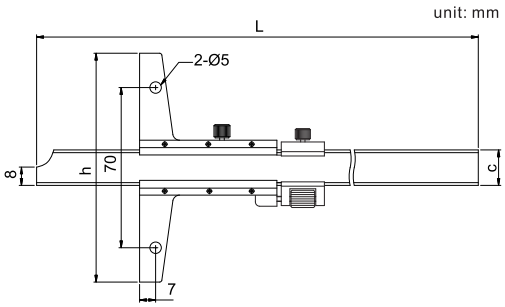

Code	Range	Graduation	Accuracy	c	h	L
178-006-11	0-150mm	0.02mm	±0.03mm	16	100	256
178-008-11	0-200mm	0.02mm	±0.03mm	16	100	306
178-012-11	0-300mm	0.02mm	±0.04mm	16	100	406
178-006-13	0-150mm	0.05mm	±0.05mm	16	100	256
178-008-13	0-200mm	0.05mm	±0.05mm	16	100	306
178-012-13	0-300mm	0.05mm	±0.08mm	16	100	406

SERIES 192 VERNIER HOOK DEPTH CALIPER

- Gruadtion: 0.02mm
- Made of stainless steel
- Satin chrome plating finish on reading surface

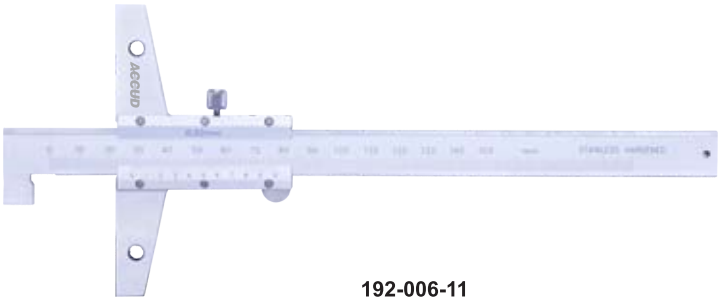

192-006-11

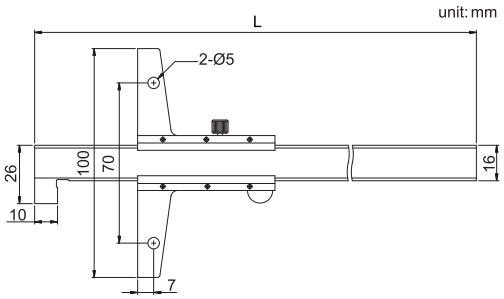

Code	Range	Accuracy	L
192-006-11	0-150mm	±0.03mm	245mm
192-008-11	0-200mm	±0.03mm	295mm
192-012-11	0-300mm	±0.04mm	395mm

ACCESSORY FOR CALIPER 179

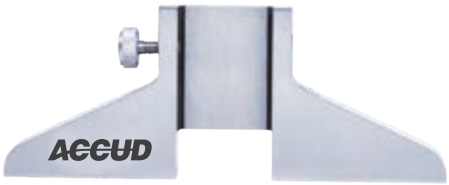

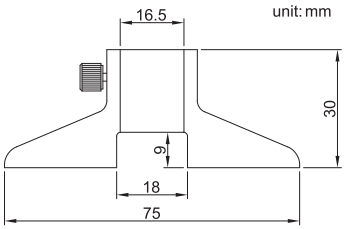

- For caliper to increase the stability of depth measurement
- For all calipers which range is 150mm and 200mm and beam width is 16mm
- Made of stainless steel

Code
179-000-00

EXTENSION BASE FOR DEPTH CALIPER SERIES 170

170-260-01

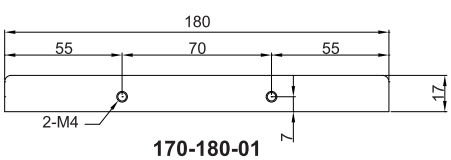

170-180-01

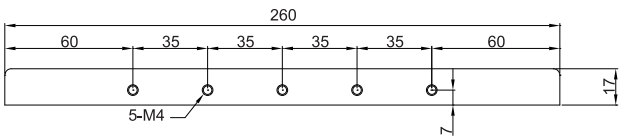

170-260-01

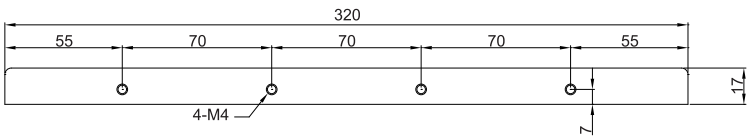

170-320-01

- Add extension base to measure large hole or gap
- For depth caliper 175, 178, 191 and 192 series

Code	Length
170-180-01	180mm
170-260-01	260mm
170-320-01	320mm

176 DIGITAL DEPTH CALIPER

- Measure the depth of grooves, small holes and tire thread
- Resolution: 0.01mm/0.0005"
- Automatic power on/off
- Buttons: on/off, zero, mm/inch
- Data output
- Made of stainless steel

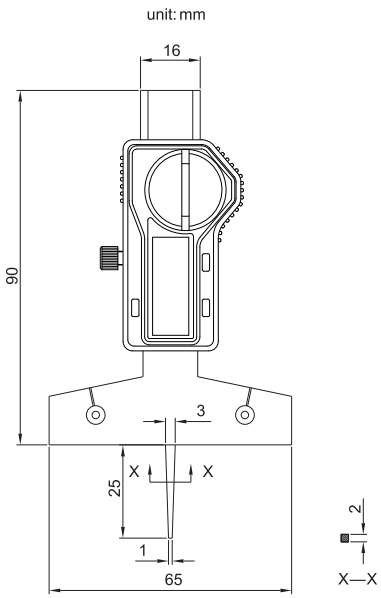

Code	Range	Accuracy
176-001-11	0-25mm/0-1"	±0.03mm

176 VERNIER DEPTH CALIPER

- Measure the depth of grooves, small holes and tire thread
- Graduation: 0.1mm
- Made of stainless steel

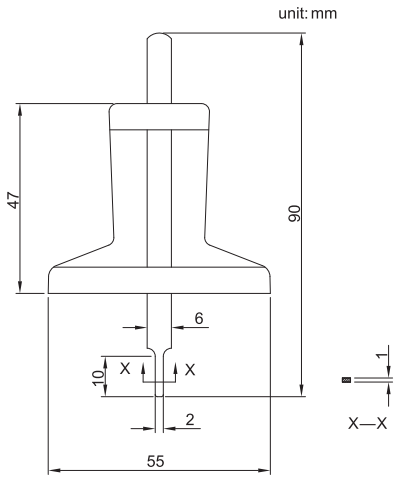

Code	Range	Accuracy
176-030-12	0-30mm	±0.10mm

DEPTH MICROMETER SERIES 391

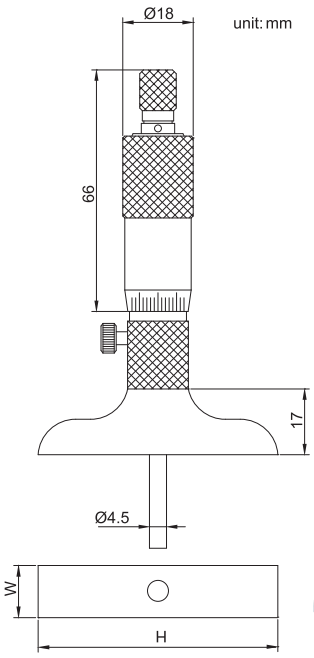

391-001-01

- Micrometer head accuracy: ±3μm
  Rod accuracy: ±(2+L/75)μm,
  L is the measuring range in mm
- Supplied with rods
- Ratchet stop

Code	Range	Base (HxW)
391-001-01	0-25mm	101.5x17mm
391-002-01	0-50mm	101.5x17mm
391-003-01	0-75mm	101.5x17mm
391-004-01	0-100mm	101.5x17mm
391-006-01	0-150mm	101.5x17mm
391-008-01	0-200mm	101.5x17mm
391-012-01	0-300mm	101.5x17mm
391-001-02	0-25mm	63x17mm
391-002-02	0-50mm	63x17mm
391-003-02	0-75mm	63x17mm
391-004-02	0-100mm	63x17mm
391-006-02	0-150mm	63x17mm
391-008-02	0-200mm	63x17mm
391-012-02	0-300mm	63x17mm

DEPTH MICROMETER SERIES 392

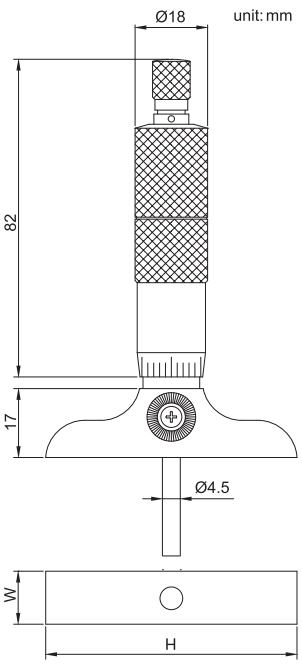

392-001-01

- Micrometer head accuracy: ±3μm
- Rod accuracy: ±(2+L/75)μm,
  L is the measuring range in mm
- Supplied with rods
- Ratchet stop

Code	Range	Base (HxW)
392-001-01	0-25mm	101.5x17mm
392-002-01	0-50mm	101.5x17mm
392-003-01	0-75mm	101.5x17mm
392-004-01	0-100mm	101.5x17mm
392-006-01	0-150mm	101.5x17mm
392-008-01	0-200mm	101.5x17mm
392-012-01	0-300mm	101.5x17mm
392-001-02	0-25mm	63x17mm
392-002-02	0-50mm	63x17mm
392-003-02	0-75mm	63x17mm
392-004-02	0-100mm	63x17mm
392-006-02	0-150mm	63x17mm
392-008-02	0-200mm	63x17mm
392-012-02	0-300mm	63x17mm

SERIES 293 DIGITAL DEPTH INDICATOR

- Resolution: 0.01mm/0.0005"
- Button: tolerance set, data preset, inch/mm conversion, measuring direction set, max./min./range measurement, absolute/incremental measurement
- Data output
- Automatic power off
- Stainless steel base
- Supplied with pointed tip and ball tip

293-300-12

293-010-12

extension rods for 293-300-11 and 293-300-12

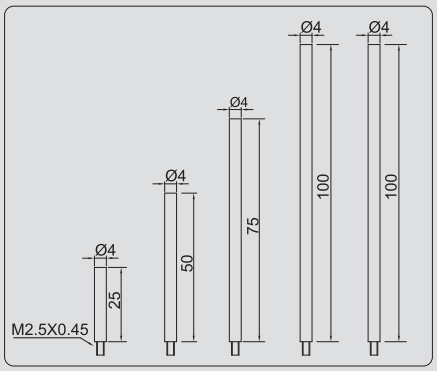

styli

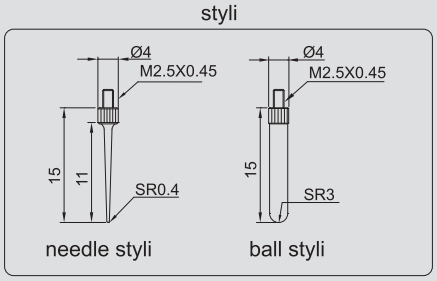

unit: mm

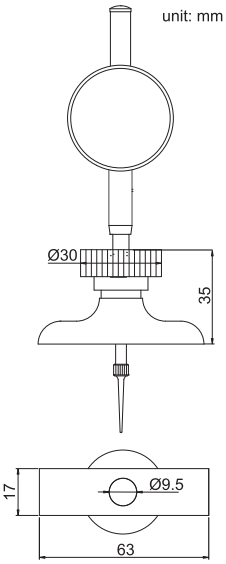

293-300-11

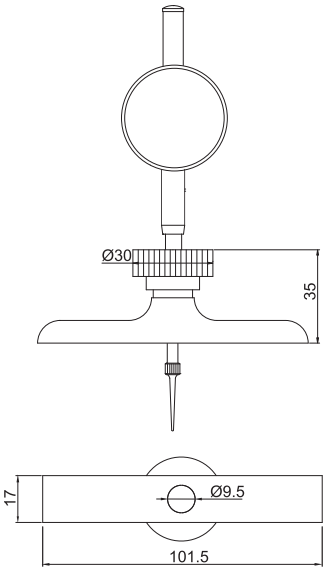

293-300-12

Code	Range	Accuracy	Digital indicator stroke	Base
293-300-11	0-300mm/0-12"	±0.03mm	25.4mm/1"	63x17mm
293-300-12	0-300mm/0-12"	±0.03mm	25.4mm/1"	101.5x17mm
293-010-11	0-10mm/0-0.4"	±0.03mm	12.7mm/0.5"	63x17mm
293-010-12	0-10mm/0-0.4"	±0.03mm	12.7mm/0.5"	101.5x17mm

DIAL DEPTH INDICATOR SERIES 291

291-010-12

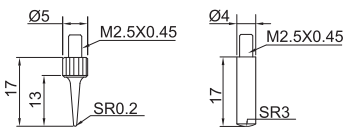

needle styli ball styli

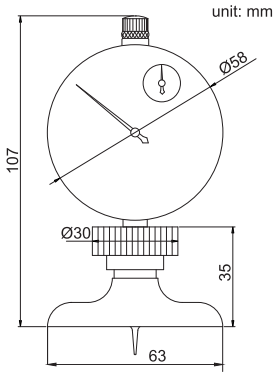

291-010-11

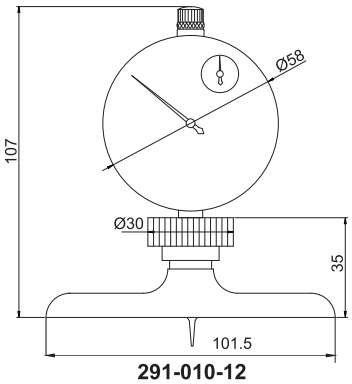

291-010-12

- Graduation: 0.01mm
- Indicator travel: 10mm
- Accuracy: ±0.03mm
- Stainless steel base
- With needle and ball styli

Code	Range	Base
291-010-11	0-10mm	63x17mm
291-010-12	0-10mm	101.5x17mm

DIAL DEPTH INDICATOR SERIES 292

292-300-12

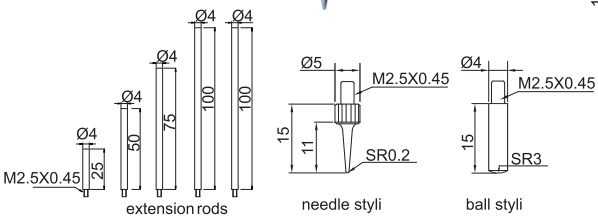

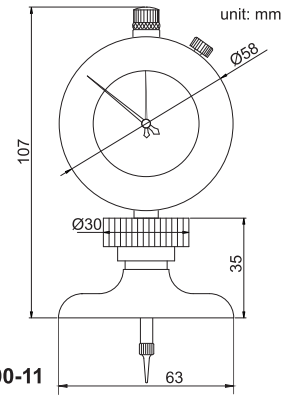

292-300-11

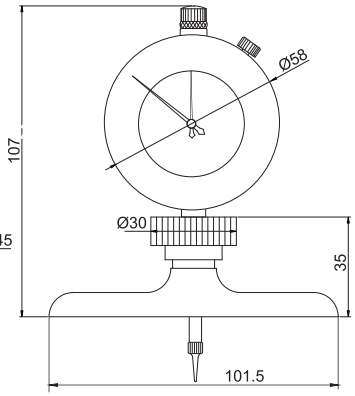

292-300-12

- Graduation: 0.01mm
- Indicator travel: 30mm
- Accuracy: ±0.03mm
- Stainless steel base
- With needle and ball styli
- Extension rod: 25mm (1pc), 50mm (1pc), 75mm (1pc), 100mm (2pcs)

Code	Range	Base
292-300-11	0-300mm	63x17mm
292-300-12	0-300mm	101.5x17mm

HG50E

PRECISION HEIGHT GAGE

- High accuracy
- Working table is made of ceramic
- Response speed: max. 5000mm/sec
- Easy convert between metric and inch
- 8 bits highlight green LED
- Power off automatically
- Optional accessories series 270 (see page 95-97)

unit: mm

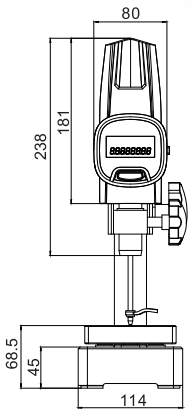

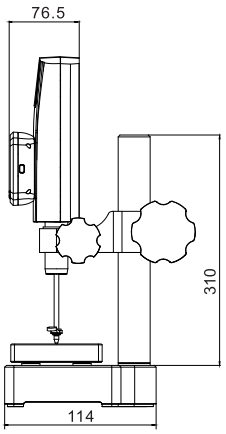

SPECIFICATION

Measuring range	0-50mm
Resolution	0.5μm / 1μm
Accuracy	1.5μm(working table is 20±1°C)
Repeatibility	0.5μm
Tip force	1-1.5N
Dimension of working table	130x130mm
Flatness of working table	1.5μm
Power supply	5V/1A AD/DC adaptor
Working temperature	0°C-40°C
Weight	6.6kg

INCLUDED ACCESSORIES

Main unit	1pc
Working table	1pc
Needle contact point	1pc
Ball contact point	1pc
AD/DC adaptor	1pc
Spindle lift knob	2pcs

Needle contact point

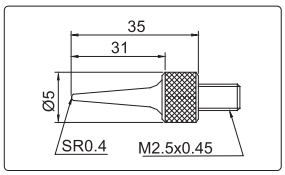

Ball contact point

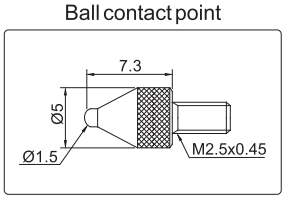

DIGITAL HEIGHT GAGE SERIES 181

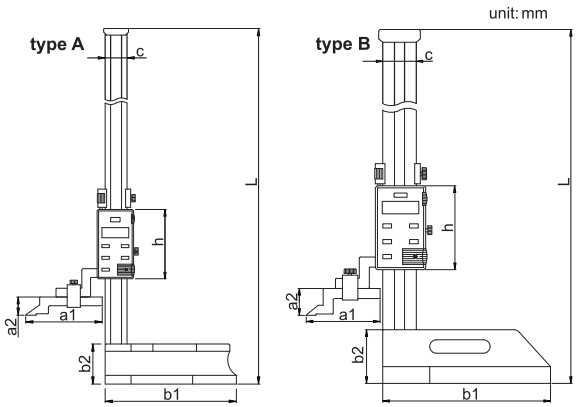

181-024-11

- Resolution: 0.01mm/0.0005"
- Buttons: on/off, inch/mm,ABS/INC ,data hold, tolerance measurement, data preset, set data
- Carbide tipped scriber
- Made of stainless steel (except the base)
- Data output
- With clamps (Ø8mm holder)

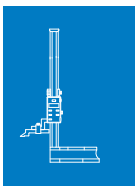

clamp

Code	Range	Type	Accuracy	a1	a2	b1	b2	c	h	L
181-012-11	0-300mm/0-12"	A	±0.04mm	76	25	135	45	23	80	470
181-024-11	0-600mm/0-24"	A	±0.05mm	103	25	180	55	30	95	820
181-040-11	0-1000mm/0-40"	B	±0.07mm	110	39	250	80	50	125	1275

DIGITAL HEIGHT GAGE WITH DRIVING WHEEL SERIES 184

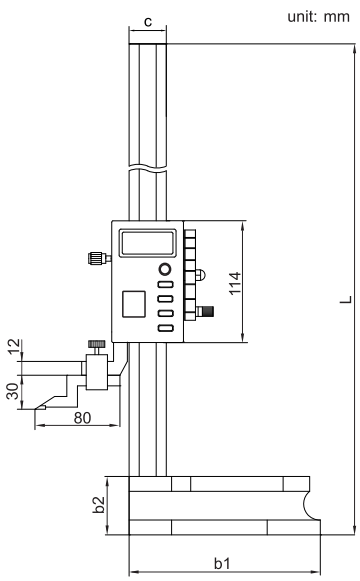

Dial test indicator holder (**optional**)

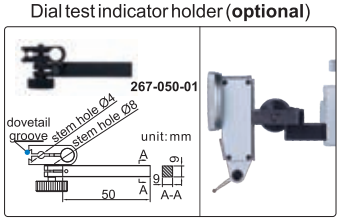

184-012-11

- Resolution: 0.01mm/0.0005"
- Buttons: on/off, zero, mm/inch, ABS/INC, hold
- Automatic power off, move the digital unit to turn on power
- Carbide tipped scriber
- Made of stainless steel
- Data output
- Optional accessories: dial test indicator holder (**267-050-01**)

Code	Range	Accuracy	b1	b2	c	L
184-012-11	0-300mm/0-12"	±0.03mm	180	55	32	515
184-024-11	0-600mm/0-24"	±0.05mm	180	55	32	815

SERIES 182 DIGITAL HEIGHT GAGE

- Resolution: 0.01mm/0.001"
- Buttons: on/off, inch/mm, ABS/INC, data preset, set data
- Carbide tipped scriber
- Made of stainless steel beam
- With driving wheel
- Optional accessory: 267 series clamps

182-012-11

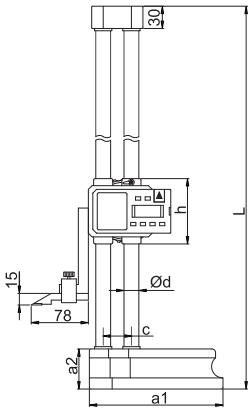

type A

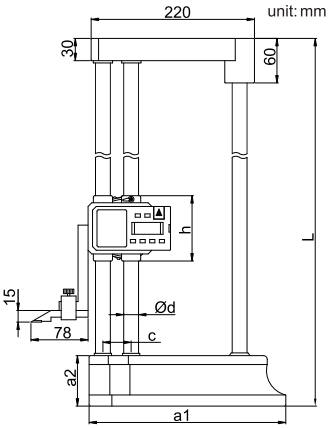

type B

driving wheel

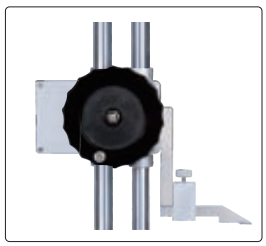

Code	Range	Type	Accuracy	a1	a2	c	Ød	h	L
182-012-11	0-300mm/0-12"	A	±0.04mm	135	43	33	15	84	475
182-024-11	0-600mm/0-24"	A	±0.05mm	180	54	38	20	88	810
182-040-11	0-1000mm/0-40"	B	±0.05mm	265	68	38	20	88	1230

SERIES 185 DIAL HEIGHT GAGE

- Indicator graduation: 0.01mm
- Carbide tipped scriber
- Made of stainless steel (except the base)
- With driving wheel
- Optional accessory: 267 series clamps

185-012-11

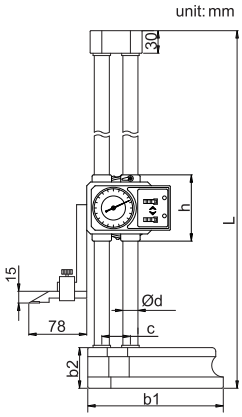

driving wheel

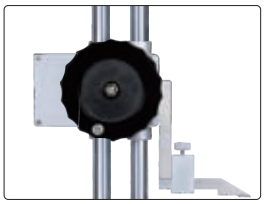

Code	Range	Accuracy	b1	b2	c	Ød	h	L
185-012-11	0-300mm	±0.04mm	135	43	33	15	84	475
185-024-11	0-600mm	±0.05mm	180	54	38	20	88	810

VERNIER HEIGHT GAGE

SERIES 186

186-012-11

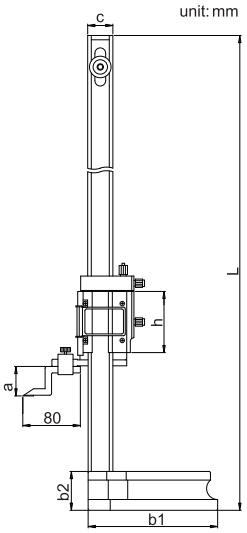

- Graduation: 0.02mm/0.001"
- Move main scale to set zero
- Carbide tipped scriber
- Made of stainless steel (except the base)
- Satin chrome plated scale
- With magnifier
- Optional accessory: 267 series clamps

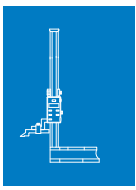

Code	Range	Accuracy	a	b1	b2	c	h	L
186-012-11	0-300mm/0-12"	±0.04mm	30	135	43	28	75	545
186-024-11	0-600mm/0-24"	±0.05mm	41	180	54	35	85	870

SCRIBER FOR HEIGHT GAUGES

SERIES 180

180-000-SC1

- Carbide tipped

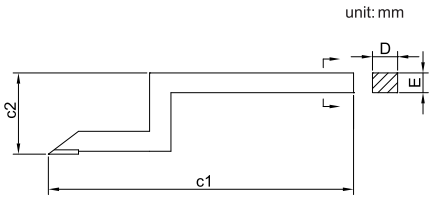

type A

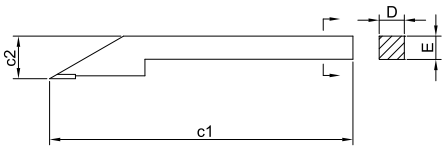

type B

Code	For height gauges	Type	c1	c2	D	E
180-000-SC1	181-012-11	A	76	25	6	8
180-000-SC2	181-024-11	A	103	25	10	12
180-000-SC3	181-040-11	A	110	39	10	15
180-000-SC4	185-012-11,185-024-11, 182-012-11,182-024-11	B	78	15	9	9
180-000-SC6	186-012-11	A	80	30	9	9
180-000-SC7	186-024-11	A	80	41	9	9

SERIES 183 MINI DIGITAL HEIGHT GAGE

- Resolution: 0.01mm/0.0005"
- Buttons: on/off, inch/mm, zero
- Carbide tipped scriber
- Made of stainless steel (except the base)
- Data output
- Automatic power off

183-006-11

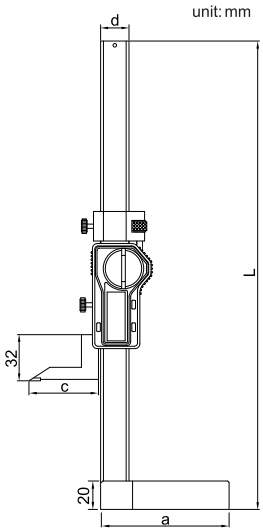

Code	Range	Accuracy	a	c	d	L
183-006-11	0-150mm/0-6"	±0.03mm	75	43	16	265
183-008-11	0-200mm/0-8"	±0.03mm	90	49	16	325
183-010-11	0-250mm/0-10"	±0.03mm	90	49	16	380

SERIES 187 MINI VERNIER HEIGHT GAGE

- Graduation 0.02mm/0.001"
- Carbide tipped scriber
- Made of stainless steel (except the base)
- Satin chrome plated scale

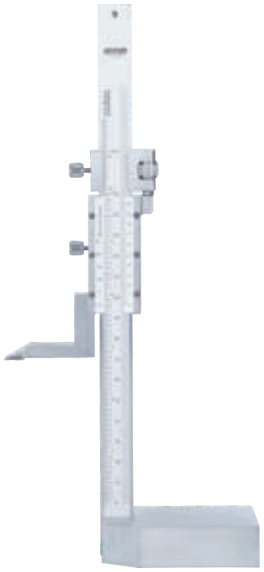

187-006-11

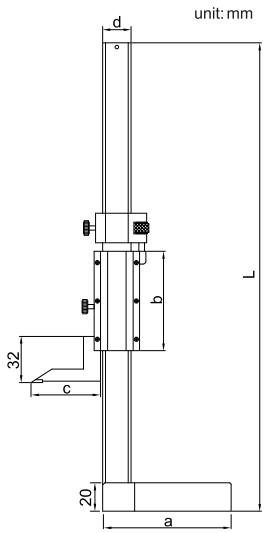

Code	Range	Accuracy	a	b	c	d	L
187-006-11	0-150mm/0-6"	±0.03mm	75	57	43	16	265
187-008-11	0-200mm/0-8"	±0.03mm	90	70	49	20	325
187-010-11	0-250mm/0-10"	±0.03mm	90	70	49	20	380

DIGITAL OUTSIDE MICROMETER

SERIES 313

313-001-01

- Resolution: 0.001mm/0.00005"
- IP65 protection level
- Button: on/off, mm/inch,set, zero
- Automatic power off
- Carbide measuring faces, ratchet stop
- Setting standards are included (except **313-001-01**)

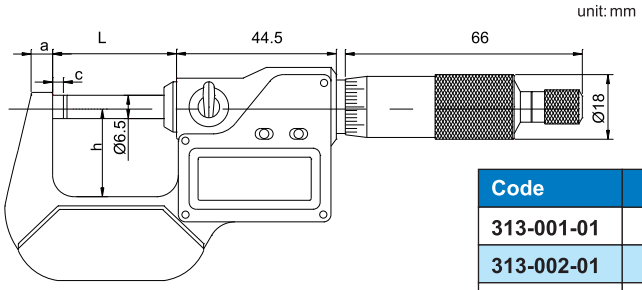

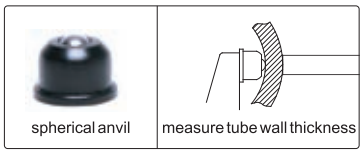

Code	Range	Accuracy	a	c	h	L
313-001-01	0-25mm/0-1"	±2μm	6	3	25	34.5
313-002-01	25-50mm/1-2"	±2μm	8	3	32	59.5
313-003-01	50-75mm/2-3"	±3μm	8	3	44.5	84.5
313-004-01	75-100mm/3-4"	±3μm	8	3	57	109.5
313-005-01	100-125mm/4-5"	±3μm	10	3	70	135
313-006-01	125-150mm/5-6"	±3μm	10	3	82	160.5
313-007-01	150-175mm/6-7"	±4μm	12	5.5	94.5	186
313-008-01	175-200mm/7-8"	±4μm	12	5.5	107	211.5

DIGITAL OUTSIDE MICROMETER WITH DATA OUTPUT

SERIES 313

313-001-01S

- Resolution: 0.001mm/0.00005"
- IP65 protection level
- Button: on/off, mm/inch,set, zero
- Automatic power off
- Carbide measuring faces, ratchet stop
- Setting standards are included (except **313-001-01S**)

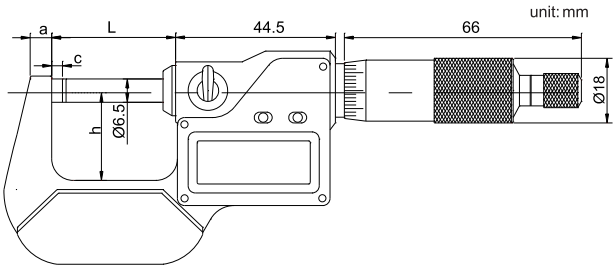

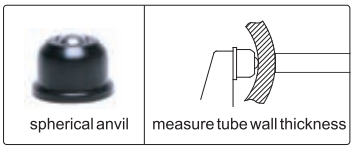

data output interface

Code	Range	Accuracy	a	c	h	L
313-001-01S	0-25mm/0-1"	±2μm	6	3	25	34.5
313-002-01S	25-50mm/1-2"	±2μm	8	3	32	59.5
313-003-01S	50-75mm/2-3"	±3μm	8	3	44.5	84.5
313-004-01S	75-100mm/3-4"	±3μm	8	3	57	109.5
313-005-01S	100-125mm/4-5"	±3μm	10	3	70	135
313-006-01S	125-150mm/5-6"	±3μm	10	3	82	160.5
313-007-01S	150-175mm/6-7"	±4μm	12	5.5	94.5	186
313-008-01S	175-200mm/7-8"	±4μm	12	5.5	107	211.5
313-009-01S	200-225mm/8-9"	±4μm	23	5.5	129.5	236
313-010-01S	225-250mm/9-10"	±4μm	23	5.5	142.5	261.5
313-011-01S	250-275mm/10-11"	±5μm	23	5.5	155	287
313-012-01S	275-300mm/11-12"	±5μm	23	5.5	167.5	312.5

SERIES 313 IP65 DIGITAL OUTSIDE MICROMETER

- Resolution: 0.001mm/0.00005"
- IP65 protection level
- Button: on/off, mm/inch, zero
- Automatic power off
- Data output
- Carbide measuring faces
- Ratchet stop
- Setting standards are included (except **313-001-02**)

313-001-02

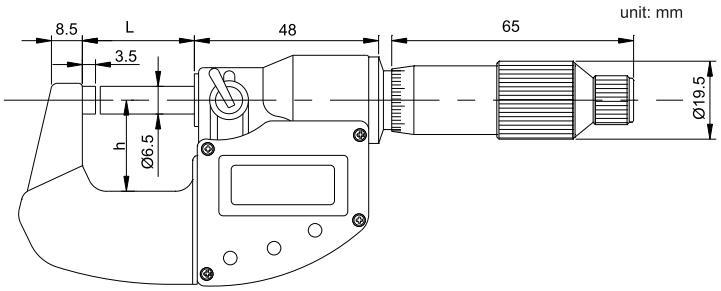

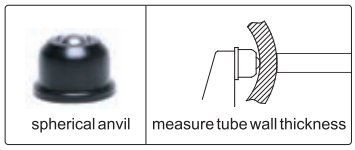

Code	Range	Accuracy	h	L
313-001-02	0-25mm/0-1"	3μm	25	31.5
313-002-02	25-50mm/1-2"	3μm	32	57
313-003-02	50-75mm/2-3"	4μm	44.5	82.5
313-004-02	75-100mm/3-4"	4μm	57	107
313-005-02	100-125mm/4-5"	5μm	70	133
313-006-02	125-150mm/5-6"	5μm	82	158

SERIES 314 DIGITAL SNAP MICROMETER

- Quick measurement with lever
- Resolution: 0.001mm/0.00005"
- IP65 protection level
- Button: on/off, mm/inch, origin, ABS/zero
- Automatic power off
- Data output
- Carbide measuring faces
- Setting standards are included (except **314-001-02**)

314-001-02

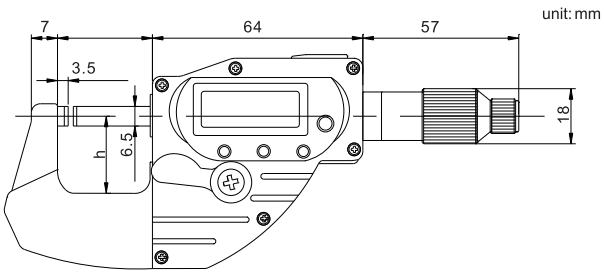

Code	Range	Accuracy	h	L
314-001-02	0-25mm/0-1"	3μm	25	31
314-002-02	25-50mm/1-2"	3μm	32	57
314-003-02	50-75mm/2-3"	4μm	44.5	82
314-004-02	75-100mm/3-4"	4μm	57	107

DIGITAL OUTSIDE MICROMETER SERIES 312

312-001-03

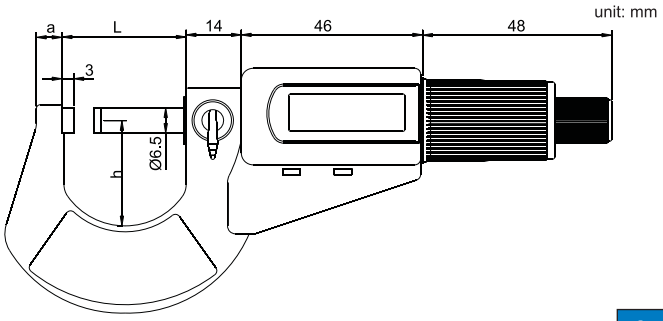

- Resolution: 0.001mm/0.00005"
- Button: ON/OFF/SET, ABS/INC/UNIT
- Carbide measuring faces
- Ratchet stop
- Setting standards are included (except **312-001-03**)

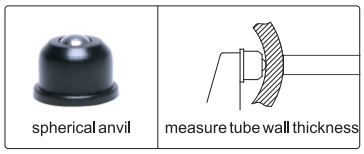

Code	Range	Accuracy	a	h	L
312-001-03	0-25mm/0-1"	±2μm	6	27.5	32
312-002-03	25-50mm/1-2"	±2μm	8	37	57
312-003-03	50-75mm/2-3"	±3μm	8	50	82
312-004-03	75-100mm/3-4"	±3μm	10	61	107

OUTSIDE MICROMETER SERIES 321

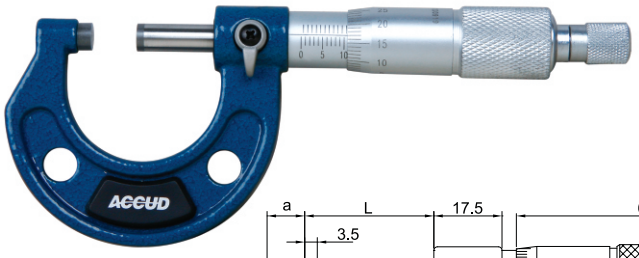

321-001-01

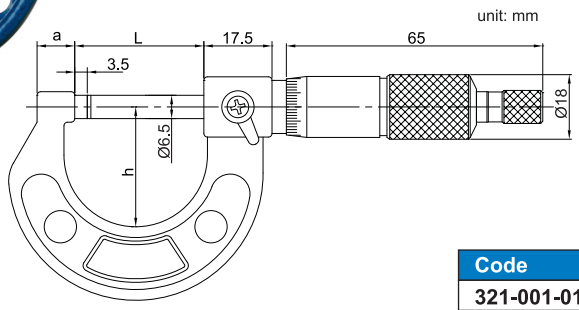

- Graduation: 0.01mm
- Carbide measuring faces
- Ratchet stop
- Setting standards are included (except **321-001-01**)

OUTSIDE MICROMETER SET

Code	Range	Total QTY.	Included micrometers
321-003-03	0-75mm	3pcs	0-25, 25-50, 50-75mm
321-004-04	0-100mm	4pcs	0-25, 25-50, 50-75, 75-100mm
321-006-06	0-150mm	6pcs	0-25, 25-50, 50-75,75-100, 100-125, 125-150mm
321-012-06	150-300mm	6pcs	150-175, 175-200, 200-225, 225-250, 250-275, 275-300mm
321-012-12	0-300mm	12pcs	0-25, 25-50, 50-75,75-100, 100-125, 125-150, 150-175, 175-200, 200-225, 225-250, 250-275, 275-300mm

INDIVIDUAL MICROMETER

Code	Range	Accuracy	a	h	L
321-001-01	0-25mm	4μm	9	29	32
321-002-01	25-50mm	4μm	9	39	58
321-003-01	50-75mm	5μm	10	53	83
321-004-01	75-100mm	5μm	10	65	109
321-005-01	100-125mm	6μm	11.5	76	133
321-006-01	125-150mm	6μm	11.5	88	159
321-007-01	150-175mm	7μm	11.5	101	185
321-008-01	175-200mm	7μm	11.5	114	210
321-009-01	200-225mm	8μm	11.5	126	235
321-010-01	225-250mm	8μm	12	139	260
321-011-01	250-275mm	9μm	12.5	151	286
321-012-01	275-300mm	9μm	12.5	164	311

SERIES 325

OUTSIDE MICROMETER WITH INTERCHANGEABLE ANVILS

- Graduation: 0.01mm
- Ratchet stop
- Carbide measuring faces
- Supplied with setting standards

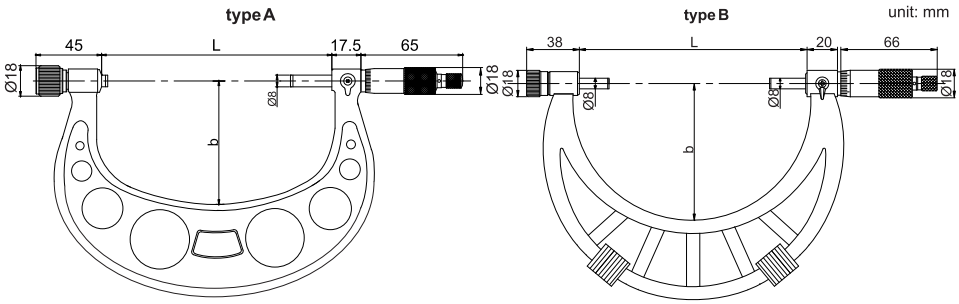

Code	Range	Type	Accuracy	L	b
325-002-01	0-50mm	A	4μm	58	35
325-004-01	0-100mm	A	5μm	108	57
325-006-01	0-150mm	A	6μm	158	82
325-008-01	100-200mm	A	7μm	208	114
325-012-01	150-300mm	A	9μm	308	165
325-016-02	300-400mm	B	11μm	409	224
325-020-02	400-500mm	B	13μm	509	275
325-024-02	500-600mm	B	14μm	609	321
325-028-02	600-700mm	B	16μm	709	371
325-032-02	700-800mm	B	18μm	809	426
325-036-02	800-900mm	B	20μm	909	476
325-040-02	900-1000mm	B	22μm	1009	576

325-006-01

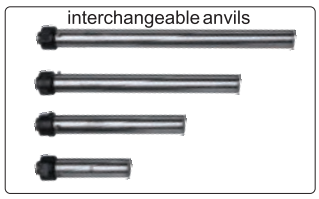

SERIES 329

OUTSIDE MICROMETER WITH EXTENSION ANVIL

- Adjust collars for different measuring ranges
- Graduation 0.01mm
- Ratchet stop
- Carbide measuring faces
- Supplied with setting standards

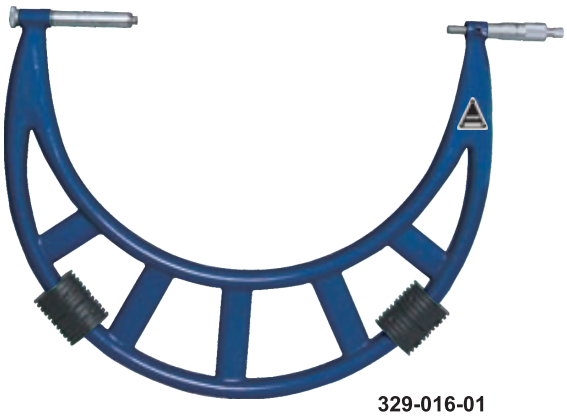

329-016-01

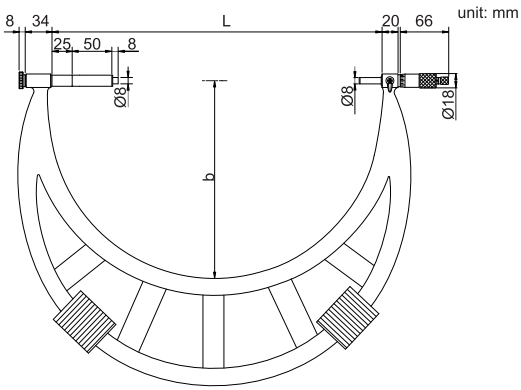

Code	Range	Accuracy	L	b
329-016-01	300-400mm	11μm	410	250
329-020-01	400-500mm	13μm	510	295
329-024-01	500-600mm	14μm	610	345
329-028-01	600-700mm	16μm	710	395
329-032-01	700-800mm	18μm	810	445
329-036-01	800-900mm	20μm	910	495
329-040-01	900-1000mm	22μm	1010	545

DIGITAL BLADE MICROMETER SERIES 316

316-001-03

- Measure the groove diameter of shafts and keyways
- Quick measurement with lever
- Resolution: 0.001mm/0.00005"
- IP65 protection level
- Button: on/off, mm/inch, origin, ABS/zero
- Automatic power off
- Data output
- Carbide measuring faces
- Setting standards are included (except **316-001-03**)

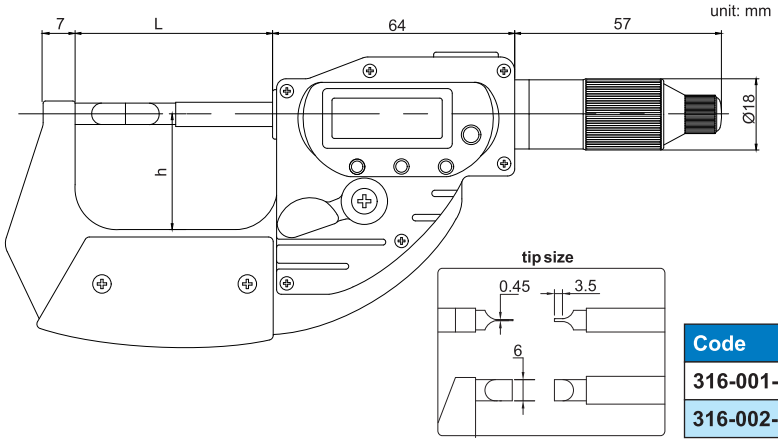

Code	Range	Accuracy	h	L
316-001-03	0-25mm/0-1"	3μm	31	55
316-002-03	25-50mm/1-2"	3μm	44	80

BLADE MICROMETER SERIES 326

326-001-03

- Measure the small groove diameter
- Graduation: 0.01mm
- Non-rotating spindle
- Ratchet stop
- Setting standards are included (except **0-25mm**)

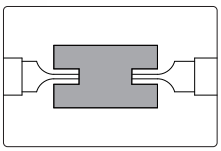

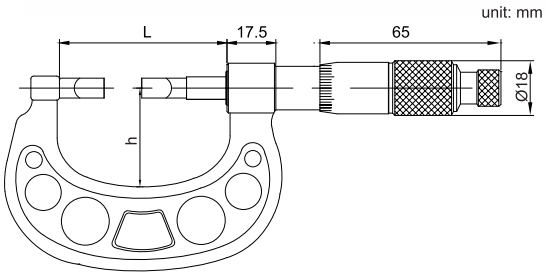

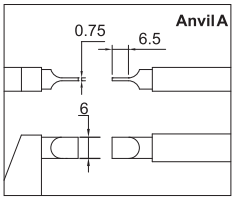

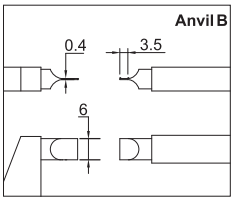

Code	Range	Anvil	Accuracy	h	L
326-001-03	0-25mm	A	4μm	35	57
326-002-03	25-50mm	A	4μm	46	82
326-003-03	50-75mm	A	5μm	58	107
326-004-03	75-100mm	A	5μm	70	133
326-005-03	100-125mm	A	6μm	83	158
326-006-03	125-150mm	A	6μm	96	183
326-007-03	150-175mm	A	7μm	109	209
326-001-04	0-25mm	B	4μm	35	57
326-002-04	25-50mm	B	4μm	46	82

SERIES 317 DIGITAL POINT MICROMETER

- Measure the web thickness of drills, small grooves and keyways
- Resolution: 0.001mm/0.00005"
- Button: on/off/set, mm/inch/ABS
- Automatic power off
- Setting standards are included (except **317-001-03**)

317-001-03

unit: mm

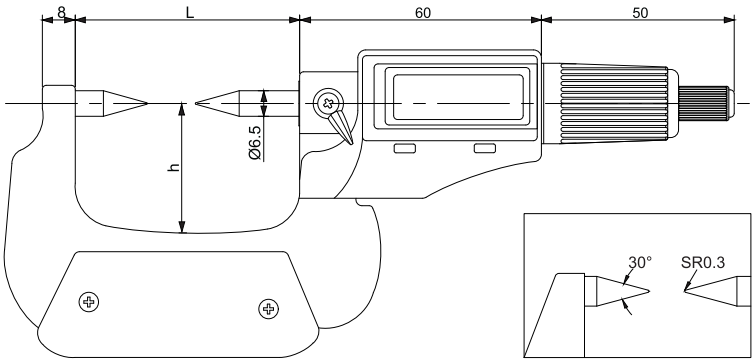

Code	Range	Accuracy	h	L
317-001-03	0-25mm/0-1"	3μm	31	55
317-002-03	25-50mm/1-2"	3μm	44	80
317-003-03	50-75mm/2-3"	4μm	58	115
317-004-03	75-100mm/3-4"	4μm	72	130

SERIES 327 POINT MICROMETER

- Measure the thickness of drills, small grooves and keyways
- Graduation: 0.01mm
- Ratchet stop
- Carbide measuring faces
- Setting standards are included (except **0-25mm**)

327-001-03

unit: mm

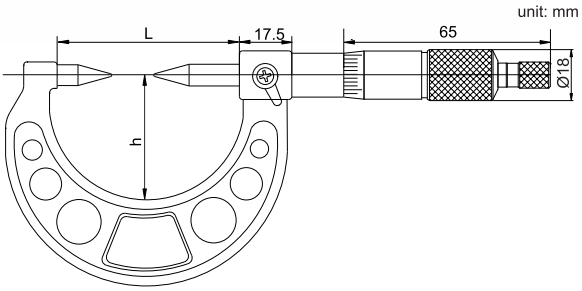

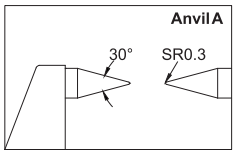

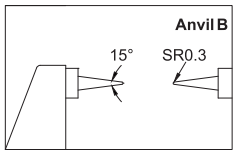

Code	Range	Anvil	Accuracy	h	L
327-001-03	0-25mm	A	4μm	39	58
327-002-03	25-50mm	A	4μm	53	83
327-003-03	50-75mm	A	5μm	65	109
327-004-03	75-100mm	A	5μm	76	133
327-001-04	0-25mm	B	4μm	39	58
327-002-04	25-50mm	B	4μm	53	83
327-003-04	50-75mm	B	5μm	65	109
327-004-04	75-100mm	B	5μm	76	133

DIGITAL SPLINE MICROMETER

SERIES 318

318-002-03

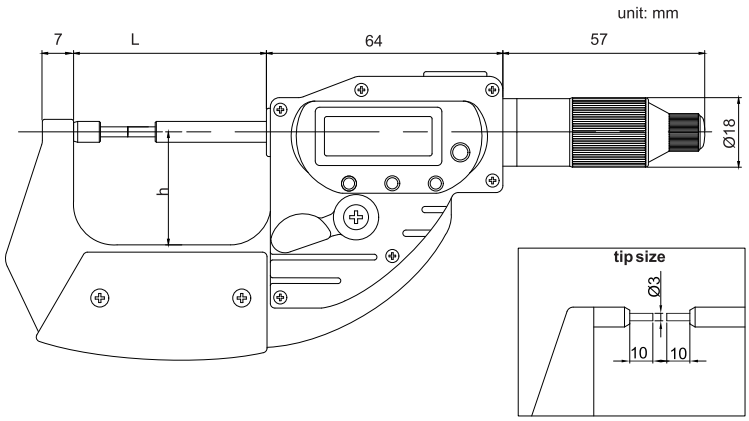

- Measure splined shafts, slots and keyways
- Quick measurement with lever
- Resolution: 0.001mm/0.00005"
- IP65 protection level
- Button: on/off, mm/inch, origin, ABS/zero
- Automatic power off
- Data output
- Carbide measuring faces
- Setting standards are included (except **318-001-03**)

Code	Range	Accuracy	h	L
318-001-03	0-25mm/0-1"	3μm	31	55
318-002-03	25-50mm/1-2"	3μm	44	80

SPLINE MICROMETER

SERIES 328

328-001-03

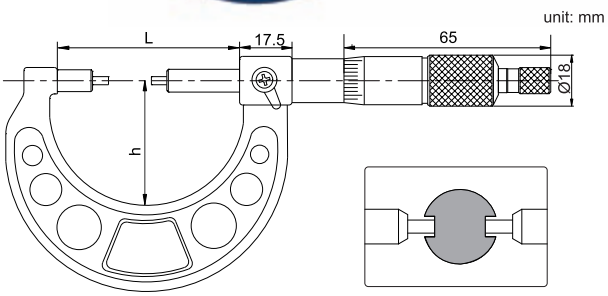

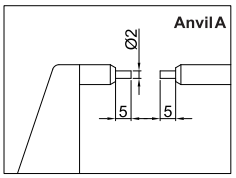

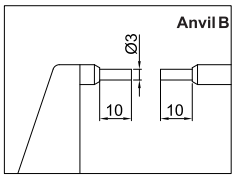

- Measure grooves and sharped parts
- Graduation: 0.01mm
- Carbide measuring faces
- Ratchet stop
- Setting standards are included (except **0-25mm**)

Code	Range	Accuracy	Anvil	h	L
328-001-04	0-25mm	4μm	A	39	58
328-001-03	0-25mm	4μm	B	39	58
328-002-03	25-50mm	4μm	B	53	83
328-003-03	50-75mm	5μm	B	65	109
328-004-03	75-100mm	5μm	B	76	133

319 DIGITAL CRIMP HEIGHT MICROMETER

- Measure the height of crimp contact
- Button: on/off/set, mm/inch/ABS
- Automatic power off
- Carbide measuring faces

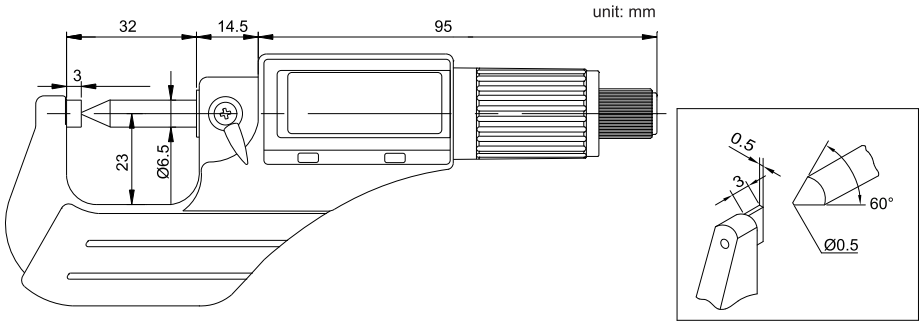

Code	Range	Accuracy
319-001-03	0-20mm/0-0.8"	3μm

SERIES 331 DIGITAL SPHERICAL ANVIL TUBE MICROMETER

- Resolution: 0.001mm/0.00005"
- Button: on/off/set, mm/inch/ABS
- Carbide measuring faces
- Ratchet stop
- Setting standards are included (except **331-001-03**)

331-001-03

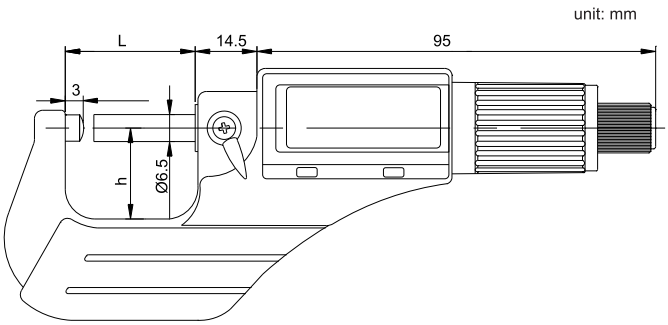

Code	Range	Accuracy	h	L
331-001-03	0-25mm/0-1"	3μm	25	31
331-002-03	25-50mm/1-2"	3μm	32	57
331-003-03	50-75mm/2-3"	4μm	44.5	82
331-004-03	75-100mm/3-4"	4μm	57	107

SPHERICAL ANVIL TUBE MICROMETER

SERIES 340

340-001-01

- Measure wall thickness of tubes
- Graduation: 0.01mm
- Carbide measuring faces
- Ratchet stop
- Setting standards are included (except **0-25mm**)

unit: mm

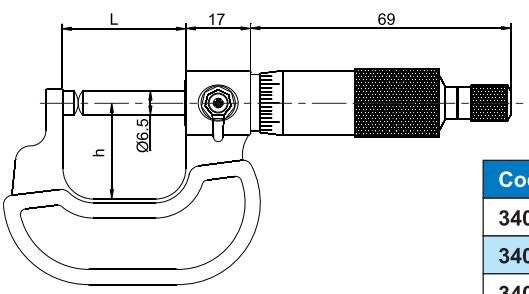

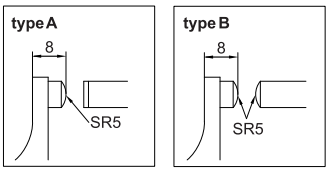

Code	Range	Type	Accuracy	L	h
340-001-01	0-25mm	A	4μm	57	24
340-002-01	25-50mm	A	4μm	82	32
340-003-01	50-75mm	A	5μm	107	44.5
340-004-01	75-100mm	A	5μm	133	57
340-001-02	0-25mm	B	4μm	57	24
340-002-02	25-50mm	B	4μm	82	32
340-003-02	50-75mm	B	5μm	107	44.5
340-004-02	75-100mm	B	5μm	133	57

TUBE MICROMETER

SERIES 341

341-001-04

- Measure the wall thickness of tube, bearing and rings
- Graduation: 0.01mm
- Carbide measuring faces
- Ratchet stop
- Setting standards are included (except **0-25mm**)

unit: mm

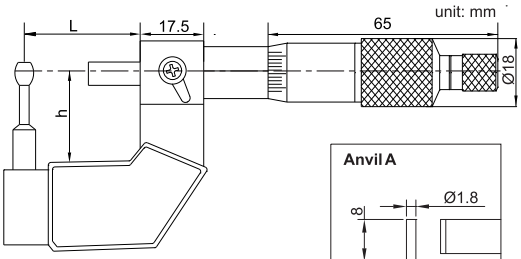

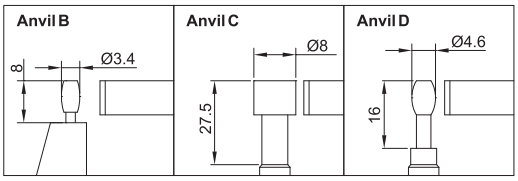

Code	Range	Anvil	Accuracy	h	L
341-001-01	0-25mm	A	6μm	24	31
341-002-01	25-50mm	A	6μm	32	57
341-001-02	0-25mm	B	6μm	24	31
341-002-02	25-50mm	B	6μm	32	57
341-001-03	0-25mm	C	6μm	24	31
341-001-04	0-25mm	D	6μm	24	31

SERIES 343 SCREW THREAD MICROMETER

- Measure pitch diameter of screw threads
- Graduation 0.01mm
- Non-rotating spindle
- Ratchet stop
- Supplied with 60° setting standards (except 0-25mm)
- Optional accessory: 55° setting standards , measuring tips

343-001-02

measuring tips are not included

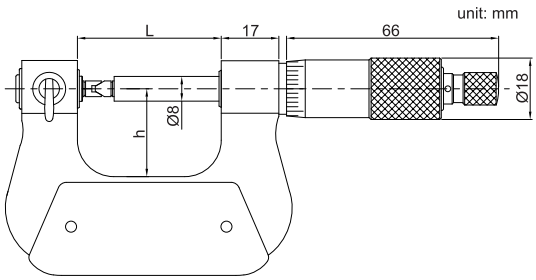

Code	Range	Micrometer head accuracy	Measuring tips accuracy	L	h
343-001-02	0-25mm	4μm	8μm	42	26
343-002-02	25-50mm	4μm	8μm	67	38
343-003-02	50-75mm	5μm	10μm	92	50
343-004-02	75-100mm	5μm	10μm	118	62
343-005-02	100-125mm	6μm	15μm	143	70
343-006-02	125-150mm	6μm	15μm	168	82
343-007-02	150-175mm	7μm	15μm	192	94.5
343-008-02	175-200mm	7μm	15μm	217	107

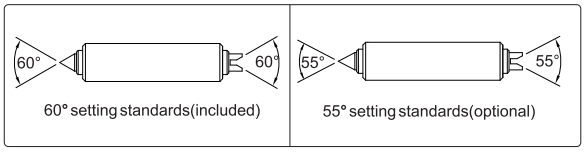

60° setting standards(included) | 55° setting standards(optional)

SERIES 343 MEASURING TIPS FOR SCREW THREAD MICROMETER

343-000-01

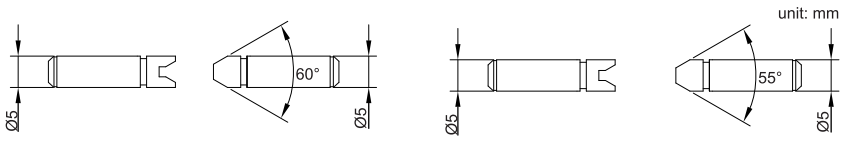

60° thread angle | 55° thread angle

Metric and unified thread (60° thread angle)

Code	Pitch
343-000-01	0.4-0.5mm/ 64-48TPI
343-000-02	0.6-0.9mm/ 44-28TPI
343-000-03	1-1.75mm/ 24-14TPI
343-000-04	2-3mm/ 13-9TPI
343-000-05	3.5-5mm/ 8-5TPI
343-000-06	5.5-7mm/ 4.5-3.5TPI
343-000-TS	6 pairs/set, including all above tips

Whitworth thread (55° thread angle)

Code	Pitch
343-000-11	60-48TPI
343-000-12	48-40TPI
343-000-13	40-32TPI
343-000-14	32-24TPI
343-000-15	24-18TPI
343-000-16	18-14TPI
343-000-17	14-10TPI

Code	Pitch
343-000-18	10-7TPI
343-000-19	7-4.5TPI
343-000-20	4.5-3.5TPI
343-000-2TS	10 pairs/set, including all above tips

DISK MICROMETER SERIES 342

342-002-02

- Measure root tangent length of gear
- Graduation 0.01mm
- Ratchet stop
- Supplied with setting standards (except 0-25mm)

unit: mm

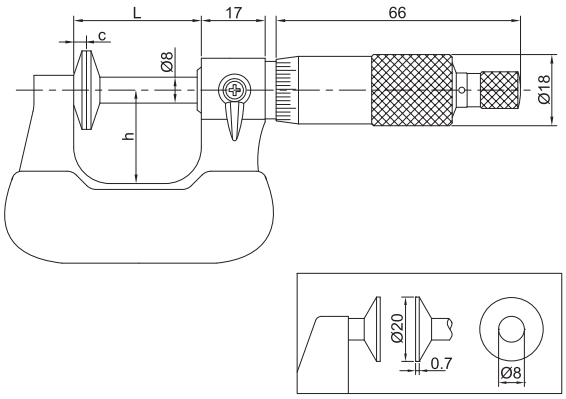

Code	Range	Accuracy	L	h	c
342-001-02	0-25mm	4μm	34	24	3.3
342-002-02	25-50mm	4μm	59	32	3.3
342-003-02	50-75mm	5μm	85	45	3.3
342-004-02	75-100mm	5μm	110	57	3.3

INDICATING MICROMETER SERIES 349

349-001-01

- Micrometer head graduation: 0.01mm
- Dial indicator: graduation 0.001mm, accuracy 0.001mm
- Carbide measuring faces
- Supplied with setting standards (except 0-25mm)

unit: mm

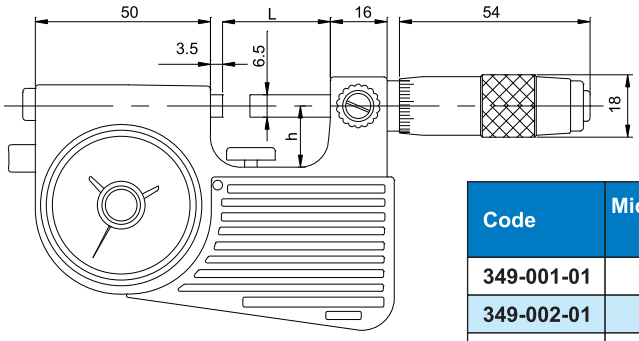

Code	Micrometer head range	Accuracy	Indicator range	L	h
349-001-01	0-25mm	±3μm	60μm	28.5	19
349-002-01	25-50mm	±3μm	60μm	53.5	30
349-003-01	50-75mm	±4μm	60μm	78.5	45
349-004-01	75-100mm	±4μm	60μm	103.5	57

SERIES 324 OUTSIDE MICROMETER

- Graduation: 0.0001in
- Carbide measuring faces
- Ratchet stop
- Setting standards are included (except **324-001-01**)

324-001-01

Code	Range	Accuracy	a	h	L
324-001-01	0-1"	±0.00016"	9	29	32
324-002-01	1-2"	±0.00016"	14	39	58
324-003-01	2-3"	±0.0002"	15	53	83
324-004-01	3-4"	±0.0002"	15	65	109
324-005-01	4-5"	±0.00024"	16.5	76	133
324-006-01	5-6"	±0.00024"	16.5	88	159
324-007-01	6-7"	±0.00028"	19.4	29	32
324-008-01	7-8"	±0.00028"	19.4	39	58
324-009-01	8-9"	±0.00031"	19.4	53	83
324-010-01	9-10"	±0.00031"	19.4	65	109
324-011-01	10-11"	±0.00035"	19.4	76	133
324-012-01	11-12"	±0.00035"	19.4	88	159

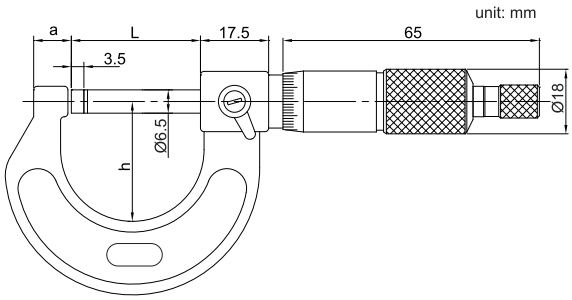

SERIES 324 OUTSIDE MICROMETER SET

324-006-06

MICROMETER SET

Code	Range	Total quantity	Included micrometers
324-003-03	0-3"	3pcs	0-1", 1-2", 2-3"
324-004-04	0-4"	4pcs	0-1", 1-2", 2-3", 3-4"
324-006-06	0-6"	6pcs	0-1", 1-2", 2-3",3-4", 4-5", 5-6"
324-012-06	6-12"	6pcs	6-7", 7-8", 8-9", 9-10", 10-11",11-12"
324-012-12	0-12"	12pcs	0-1", 1-2", 2-3",3-4", 4-5", 5-6", 6-7", 7-8", 8-9", 9-10", 10-11",11-12"

MICROMETER STAND 381

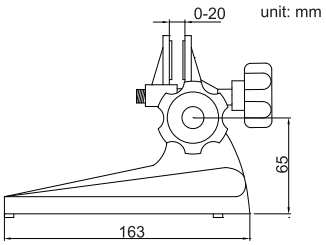

- For micrometers which measuring range is less than 100mm

Code
381-000-00

MICROMETER STAND 383

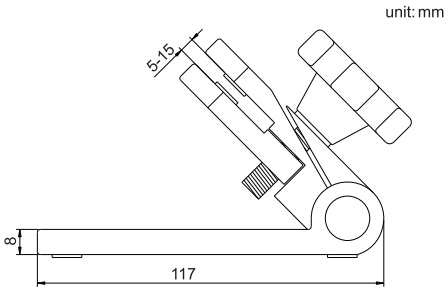

- For micrometers which measuring range is less than 100mm

Code
383-000-00

SERIES 551 OPTICAL PARALLEL

- Check the flatness and parallelism of measuring faces of micrometer

Code	Parallels included
551-001-02	12, 12.12, 12.25, 12.37mm
551-002-02	25, 25.12, 25.25, 25.37mm

SERIES 321 MICROMETER SETTING STANDARD

321-004-ST

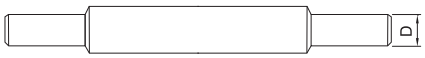

Code	Length	Accuracy	D
321-001-ST	25mm	±1.5μm	Ø7mm
321-002-ST	50mm	±2μm	Ø7mm
321-003-ST	75mm	±2.5μm	Ø7mm
321-004-ST	100mm	±3μm	Ø8mm
321-005-ST	125mm	±3.5μm	Ø8mm
321-006-ST	150mm	±4μm	Ø8mm
321-007-ST	175mm	±4.5μm	Ø8mm
321-008-ST	200mm	±5μm	Ø8mm
321-009-ST	225mm	±5.5μm	Ø8mm
321-010-ST	250mm	±6μm	Ø8mm
321-011-ST	275mm	±6.5μm	Ø8mm

MICROMETER HEAD SERIES 371

371-001-02

- Graduation: 0.01mm
- Accuracy: 0.003mm
- Carbide measuring faces
- Ratchet stop

unit: mm

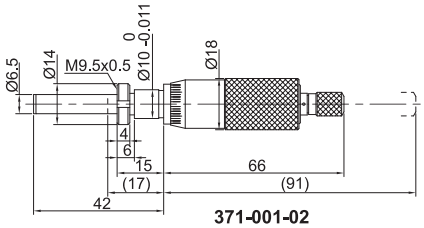

371-001-02

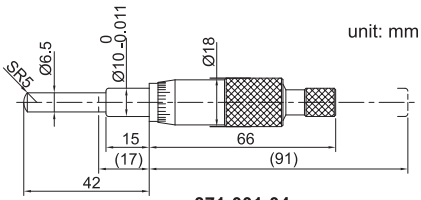

371-001-04

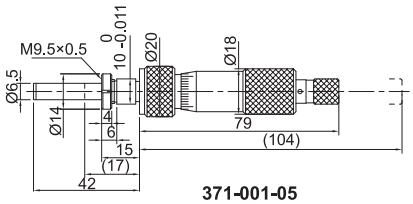

371-001-05

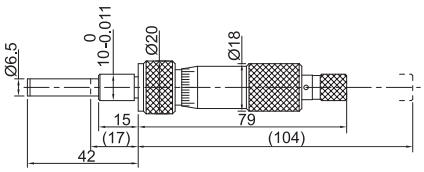

371-001-06

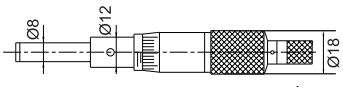

371-001-11

Code	Range	Stem	Spindle tip	Remark
371-001-02	0-25mm	with clamp nut	flat (carbide)	
371-001-03	0-25mm	with clamp nut	spherical (SR5)	
371-001-04	0-25mm	plain	spherical (SR5)	
371-001-05	0-25mm	with clamp nut	flat (carbide)	with spindle lock
371-001-06	0-25mm	plain	flat (carbide)	with spindle lock
371-001-11	0-25mm	plain	flat (carbide)	

DIGITAL MICROMETER HEAD SERIES 376

376-001-02

- Resolution 0.001mm/0.00005"
- IP54 dust/waterproof
- Button function: on/off, set, mm/inch, ABS/INC, data output
- Data output
- Automatic power off
- Ratchet stop

unit: mm

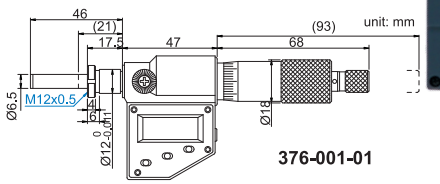

376-001-01

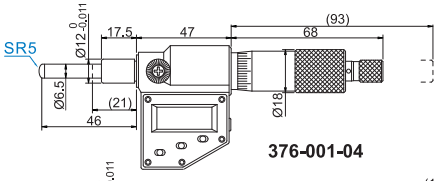

376-001-04

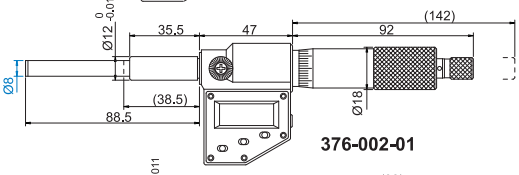

376-002-01

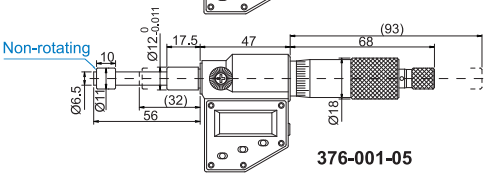

376-001-05

Rotating spindle

Code	Range	Stem	Spindle tip	Accuracy
376-001-01	0-25mm/0-1"	with clamp nut	flat (carbide)	±2μm
376-001-02	0-25mm/0-1"	plain	flat (carbide)	±2μm
376-001-03	0-25mm/0-1"	with clamp nut	spherical (SR5)	±2μm
376-001-04	0-25mm/0-1"	plain	spherical (SR5)	±2μm
376-002-01	0-50mm/0-2"	plain	flat (carbide)	±4μm

Non-rotating spindle

Code	Range	Stem	Spindle tip	Accuracy
376-001-05	0-25mm/0-1"	plain	flat (carbide)	±2μm

SERIES 361 DIGITAL THREE POINTS INSIDE MICROMETER

- Resolution: 0.001mm/0.00005"
- IP54 protection level
- Automatic power off
- Data output
- Ratchet stop
- Carbide measuring faces (over 12mm series)
- Setting rings and extension rod are included

361-003-01

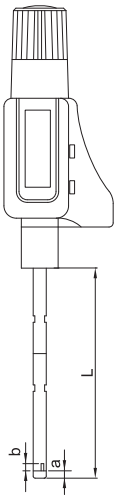

Range 6-20mm

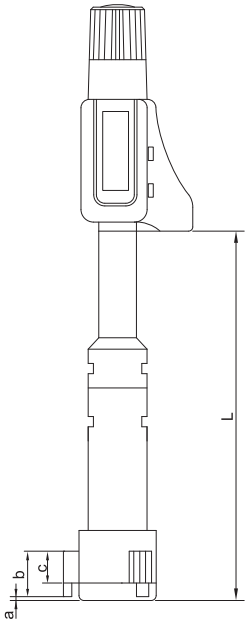

Range 20-100mm

Code	Range	Accuracy	Setting ring	Extension rod	a	b	c	L
361-001-01	6-8mm/0.24-0.31"	4μm	Ø6mm	100mm	1.5	2.5	/	54.5
361-002-01	8-10mm/0.31-0.4"	4μm	Ø8mm	100mm	1.5	2.5	/	63
361-003-01	10-12mm/0.4-0.47"	4μm	Ø10mm	100mm	1.5	2.5	/	63
361-004-01	12-16mm/0.47-0.63"	4μm	Ø16mm	150mm	0.5	6	4.5	80
361-005-01	16-20mm/0.63-0.8"	4μm	Ø16mm	150mm	0.5	6	4.5	80
361-006-01	20-25mm/0.8-1"	4μm	Ø25mm	150mm	0.5	8	6	105
361-007-01	25-30mm/1-1.2"	4μm	Ø25mm	150mm	0.5	8	6	105
361-008-01	30-40mm/1.2-1.6"	4μm	Ø40mm	150mm	0.5	14	12	110
361-009-01	40-50mm/1.6-2"	5μm	Ø40mm	150mm	0.5	14	12	110
361-010-01	50-63mm/2-2.5"	5μm	Ø62mm	150mm	0.5	17.5	14.5	114
361-011-01	62-75mm/2.5-3"	5μm	Ø62mm	150mm	0.5	17.5	14.5	114
361-012-01	75-88mm/3-3.5"	5μm	Ø87mm	150mm	0.5	17.5	14.5	114
361-013-01	87-100mm/3.5-4"	5μm	Ø87mm	150mm	0.5	17.5	14.5	114

setting ring

extension rod

THREE POINTS INSIDE MICROMETER

SERIES 362

362-004-01

- **6-12mm** graduation: 0.001mm
  Steel measuring faces
  12-100mm graduation: 0.005mm
  Carbide measuring faces
- Ratchet stop
- Setting rings and extension rod are included

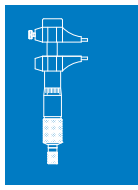

unit: mm

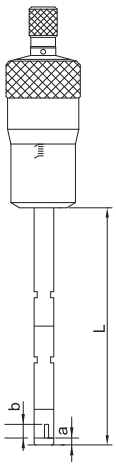

Range 6-12mm

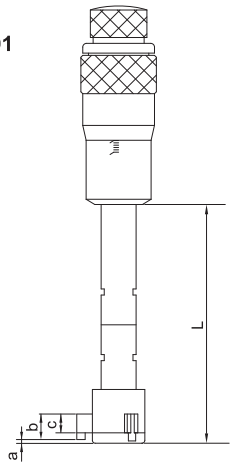

Range 12-100mm

Code	Range	Accuracy	Setting ring	Extension rod	a	b	c	L
362-001-01	6-8mm	4μm	Ø6mm	100mm	1.5	2.5	/	54.5
362-002-01	8-10mm	4μm	Ø8mm	100mm	1.5	2.5	/	54.5
362-003-01	10-12mm	4μm	Ø10mm	100mm	1.5	2.5	/	54.5
362-004-01	12-16mm	4μm	Ø16mm	150mm	0.5	6	4.5	80
362-005-01	16-20mm	4μm	Ø16mm	150mm	0.5	6	4.5	80
362-006-01	20-25mm	4μm	Ø25mm	150mm	0.5	8	6	90
362-007-01	25-30mm	4μm	Ø25mm	150mm	0.5	8	6	90
362-008-01	30-40mm	4μm	Ø40mm	150mm	0.5	14	12	97
362-009-01	40-50mm	5μm	Ø40mm	150mm	0.5	14	12	97
362-010-01	50-63mm	5μm	Ø62mm	150mm	0.5	17.5	14.5	114
362-011-01	62-75mm	5μm	Ø62mm	150mm	0.5	17.5	14.5	114
362-012-01	75-88mm	5μm	Ø87mm	150mm	0.5	17.5	14.5	114
362-013-01	87-100mm	5μm	Ø87mm	150mm	0.5	17.5	14.5	114

setting ring

extension rod

SERIES 361/362 THREE POINTS INSIDE MICROMETER SET

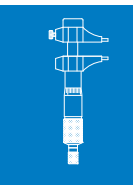

DIGITAL TYPE

Code	Range	Micrometers included	Setting ring	Extension rod
361-103-03	6-12mm	6-8, 8-10, 10-12mm	Ø6, Ø8, Ø10mm	100mm
361-305-03	12-20mm	12-16, 16-20mm	Ø16mm	150mm
361-509-05	20-50mm	20-25, 25-30, 30-40, 40-50mm	Ø25mm, Ø40mm	150mm
361-913-05	50-100mm	50-63, 62-75, 75-88, 87-100mm	Ø62mm, Ø87mm	150mm

MECHANICAL TYPE

Code	Range	Micrometers included	Setting ring	Extension rod
362-103-03	6-12mm	6-8, 8-10, 10-12mm	Ø6, Ø8, Ø10mm	100mm
362-305-03	12-20mm	12-16, 16-20mm	Ø16mm	150mm
362-509-05	20-50mm	20-25, 25-30, 30-40, 40-50mm	Ø25mm, Ø40mm	150mm
362-913-05	50-100mm	50-63, 62-75, 75-88, 87-100mm	Ø62mm, Ø87mm	150mm

362-913-05

SERIES 351 INSIDE MICROMETER

- Graduation: 0.01mm
- Carbide measuring faces
- Ratchet stop

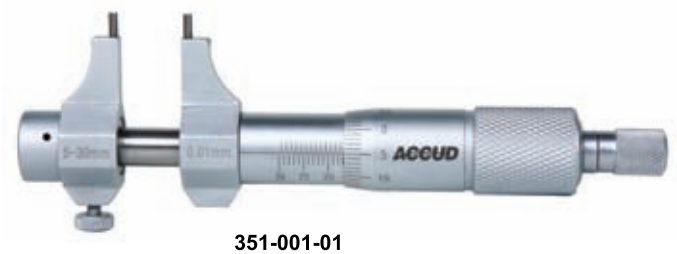

351-001-01

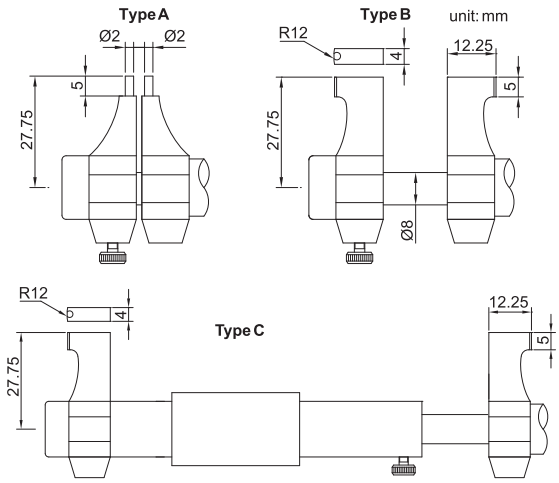

Code	Range	Type	Setting ring	Accuracy
351-001-01	5-30mm	A	included	7μm
351-002-01	25-50mm	B	included	8μm
351-003-01	50-75mm	B	optional	9μm
351-004-01	75-100mm	C	optional	10μm
351-005-01	100-125mm	C	optional	10μm
351-006-01	125-150mm	C	optional	11μm
351-007-01	150-175mm	C	optional	11μm
351-008-01	175-200mm	C	optional	12μm

TUBULAR INSIDE MICROMETER SERIES 352

352-006-01

- Graduation: 0.01mm
- Travel of micrometer head: 13mm
- Accuracy: (3+n+L/50)μm, n is number of rods, L is max. measuring length in mm
- Supplied with setting standards
- Carbide measuring faces

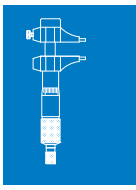

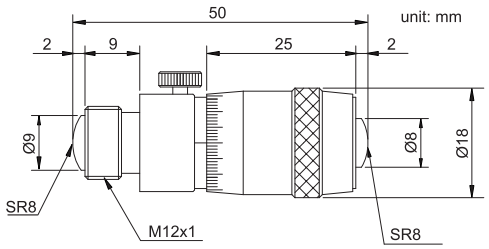

Code	Range	Extension rods (mm)
352-002-01	50-63mm	—
352-006-01	50-150mm	13, 25, 50
352-012-01	50-300mm	13, 25, 50(2pcs), 100
352-020-01	50-500mm	13, 25, 50(2pcs), 100, 200
352-024-01	50-600mm	13, 25, 50, 100, 150, 200
352-040-01	50-1000mm	13, 25, 50(2pcs), 100, 200(2pcs), 300
352-060-01	50-1500mm	13, 25, 50(2pcs), 100, 200(3pcs), 300(2pcs)

TUBULAR INSIDE MICROMETER SERIES 354

354-005-01

- Graduation 0.01mm
- Carbide measuring faces

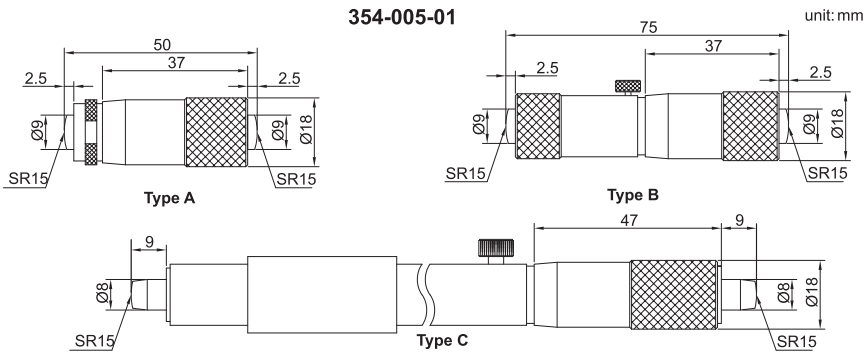

Code	Range	Type	Accuracy
354-003-01	50-75mm	A	5μm
354-004-01	75-100mm	B	5μm
354-005-01	100-125mm	C	6μm
354-006-01	125-150mm	C	6μm
354-007-01	150-175mm	C	7μm
354-008-01	175-200mm	C	7μm
354-009-01	200-225mm	C	8μm
354-010-01	225-250mm	C	8μm
354-011-01	250-275mm	C	9μm

Code	Range	Type	Accuracy
354-012-01	275-300mm	C	9μm
354-013-01	300-325mm	C	9μm
354-014-01	325-350mm	C	9μm
354-015-01	350-375mm	C	10μm
354-016-01	375-400mm	C	10μm
354-017-01	400-425mm	C	10μm
354-018-01	425-450mm	C	10μm
354-019-01	450-475mm	C	11μm
354-020-01	475-500mm	C	11μm

SERIES 353 TUBULAR INSIDE MICROMETER

- Graduation 0.01mm
- Accuracy: (3+n+L/50)μm
  n is number of rods, L is maximum measuring length in mm
- Travel of micrometer head: 25mm
- Supplied with setting standards
- Carbide measuring faces

353-020-01

Code	Range	Extension rods (mm)
353-005-01	100-125mm	—
353-020-01	100-500mm	25, 50, 100, 200
353-036-01	100-900mm	25, 50, 100, 200, 400
353-052-01	100-1300mm	25, 50, 100, 200, 400(2pcs)
353-068-01	100-1700mm	25, 50, 100, 200, 400(3pcs)
353-084-01	100-2100mm	25, 50 100, 200, 400(4pcs)

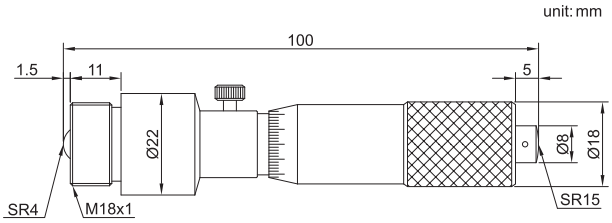

355 TUBULAR INSIDE MICROMETER

- Graduation 0.01mm
  Accuracy: (6+L/50)μm
  L=maximum measuring length(mm)
- Optional accessary: setting ring(code **531**)

355-008-01

Code	Range	Extension rods	Travel of micrometer head
355-001-01	25-32mm	—	7mm
355-002-01	25-50mm	2pcs	7mm
355-003-01	50-63mm	—	13mm
355-008-01	50-200mm	6pcs	13mm
355-012-01	50-300mm	10pcs	13mm
355-009-01	200-225mm	—	25mm
355-020-01	200-500mm	3pcs	25mm
355-040-01	200-1000mm	8pcs	25mm

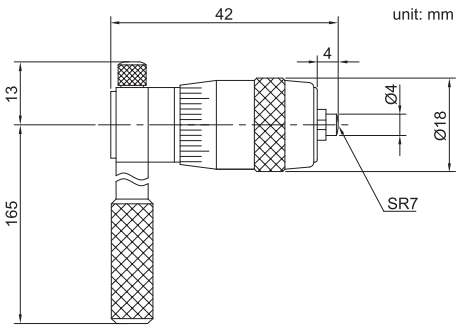

PRECISION DIAL BORE GAUGE

SERIES 251

- Wooden handle isolate heat conduction
- Optional accessory: series 531 setting rings and long handle series 250.

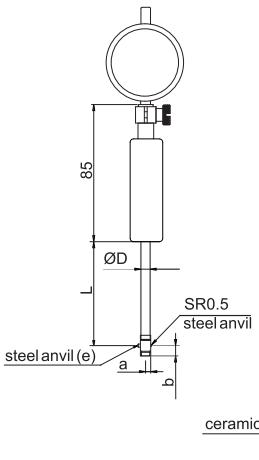

Range: 6-10mm

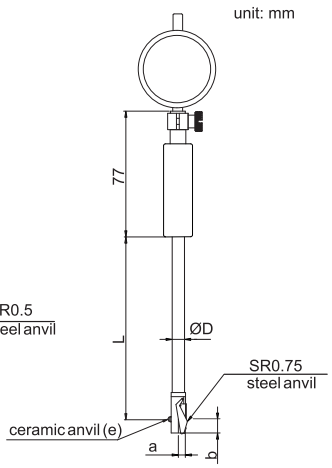

Range: 10-18mm

251-160-01

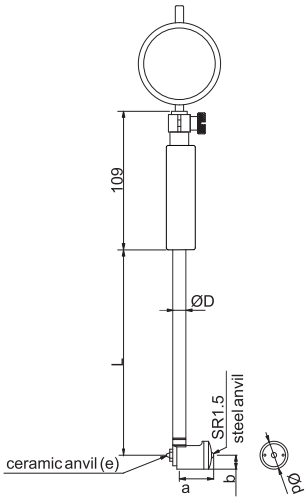

Range: 18-35mm

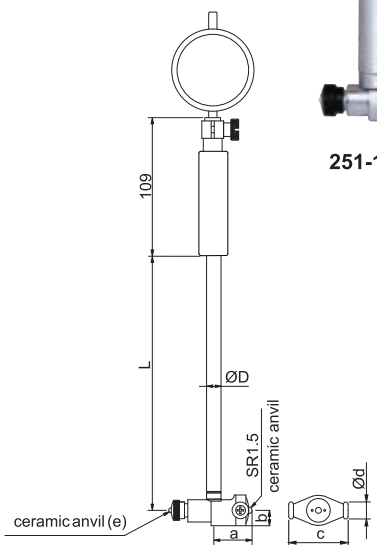

Range: 35mm - 450mm

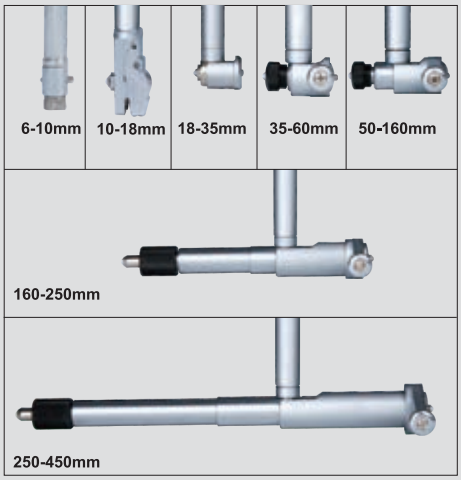

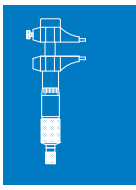

Code	Range	Dial indicator	Accuracy	Repeatability	a	b	c	Ød	ØD	e	L
251-010-01	6-10mm	Range: 1mm graduation: 0.001mm	±0.005mm	2μm	3.6	5.7	/	/	4.5	SR1	48
251-018-01	10-18mm		±0.005mm	2μm	5.6	7.8	/	/	6	SR1	105
251-035-01	18-35mm		±0.006mm	2μm	12.2	6.4	/	12.7	9	SR1	141
251-060-01	35-60mm		±0.007mm	2μm	26	9	27	13	12.8	SR2	141
251-160-01	50-160mm		±0.007mm	2μm	26	9	35	13	12.8	SR2	141
251-250-01	160-250mm		±0.007mm	2μm	56.5	13	74.5	15	14.5	SR3.5	400
251-450-01	250-450mm		±0.007mm	2μm	86.5	15	101.5	15	14.5	SR3.5	400

SERIES 251 DIAL BORE GAUGE

- Wooden handle isolate heat conduction
- Optional accessory: series 531 setting rings

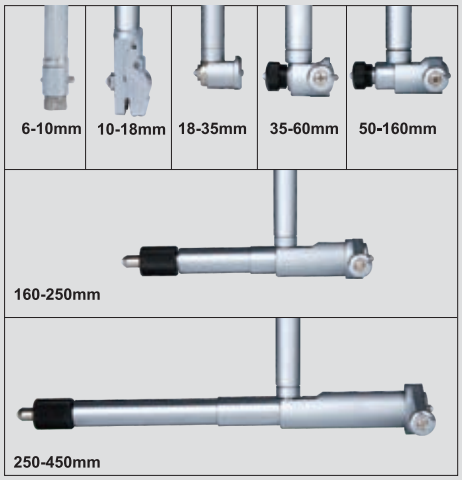

251-160-11

unit: mm

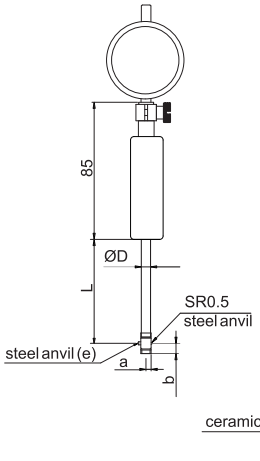

Range: 6-10mm

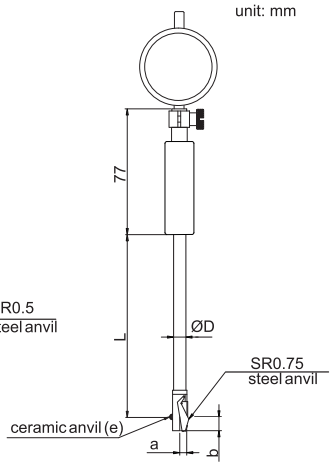

Range: 10-18mm

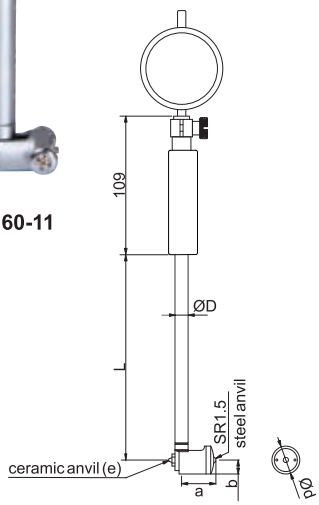

Range: 18-35mm

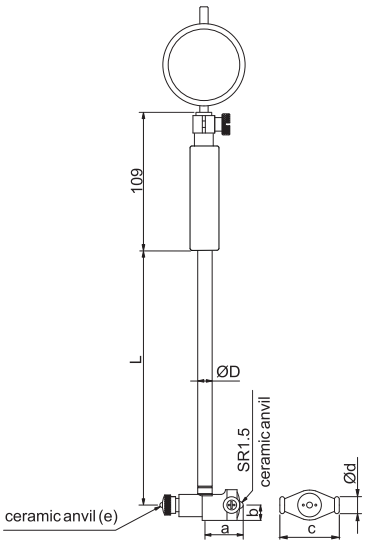

Range: 35mm - 450mm

Code	Range	Dial indicator	Accuracy	Repeatability	a	b	c	Ød	ØD	e	L
251-010-11	6-10mm	Range: 3mm graduation: 0.01mm	±0.012mm	3μm	3.6	5.7	/	/	4.5	SR1	48
251-018-11	10-18mm		±0.012mm	3μm	5.6	7.8	/	/	6	SR1	105
251-035-11	18-35mm	Range: 10mm graduation: 0.01mm	±0.015mm	3μm	12.2	6.4	/	12.7	9	SR1	141
251-060-11	35-60mm		±0.018mm	3μm	26	9	27	13	12.8	SR2	141
251-100-11	50-100mm		±0.018mm	3μm	26	9	35	13	12.8	SR2	141
251-160-11	50-160mm		±0.018mm	3μm	26	9	35	13	12.8	SR2	141
251-160-12	100-160mm		±0.018mm	3μm	26	9	35	13	12.8	SR2	141
251-250-11	160-250mm		±0.018mm	3μm	56.5	13	74.5	15	14.5	SR3.5	400
251-450-11	250-450mm		±0.018mm	3μm	86.5	15	101.5	15	14.5	SR3.5	400

DIAL BORE GAUGE SET

SERIES 251

- Wooden handle isolate heat conduction
- Optional accessory: series 531 setting rings

251-046-11

251-346-13

Code	Range	Indicator	Accuracy	Repeatability	Bore gages included
251-046-11	35-160mm	range 10mm, graduation 0.01mm	35-50mm ±0.018mm 50-160mm ±0.018mm	0.003mm	35-50mm anvil (dial indicator and handle are not included) 50-160mm bore gage
251-346-13	18-160mm	range 10mm, graduation 0.01mm	18-35mm ±0.015mm 35-60mm ±0.018mm 50-160mm ±0.018mm	0.003mm	18-35mm bore gage 35-60mm (dial indicator is not included) 50-160mm (dial indicator is not included)

SERIES 241 DIGITAL PRECISION BORE GAUGE

- Wooden handle isolate heat conduction
- With min. value tracking function, get the diameter automatically
- Optional accessory: series 531 setting rings

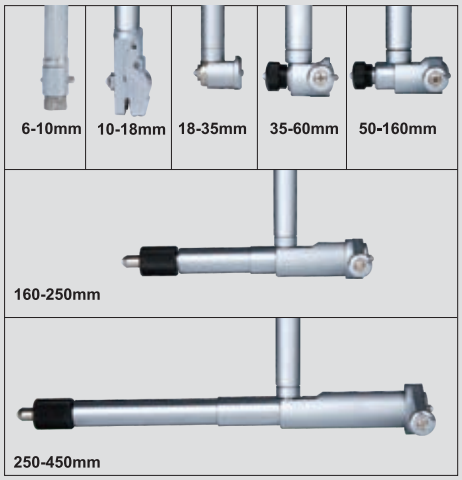

241-035-01

unit: mm

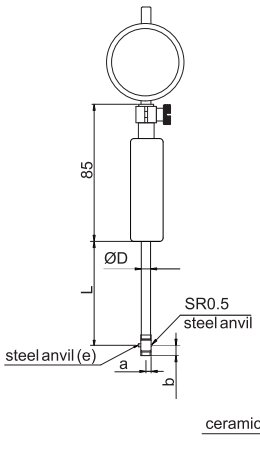

Range: 6-10mm

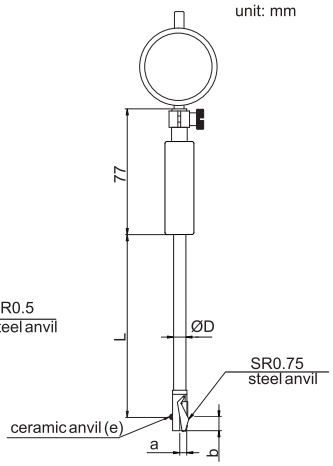

Range: 10-18mm

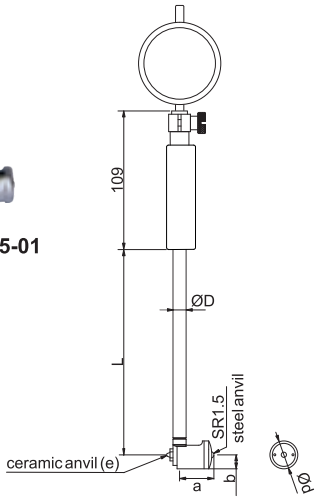

Range: 18-35mm

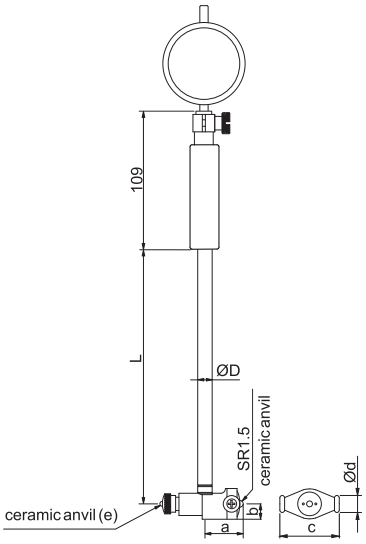

Range: 35mm - 450mm

Code	Range	Digital indicator	Accuracy	Repeatability	a	b	c	Ød	ØD	e	L
241-010-01	6-10mm	Range: 12.7mm resolution: 0.001mm	±0.012mm	2μm	3.6	5.7	/	/	4.5	SR1	48
241-018-01	10-18mm		±0.012mm	2μm	5.6	7.8	/	/	6	SR1	105
241-035-01	18-35mm		±0.015mm	2μm	12.2	6.4	/	12.7	9	SR1	141
241-060-01	35-60mm		±0.018mm	2μm	26	9	27	13	12.8	SR2	141
241-160-01	50-160mm		±0.018mm	2μm	26	9	35	13	12.8	SR2	141
241-160-02	100-160mm		±0.018mm	2μm	26	9	35	13	12.8	SR2	141
241-250-01	160-250mm		±0.018mm	2μm	56.5	13	74.5	15	14.5	SR3.5	400
241-450-01	250-450mm		±0.018mm	2μm	86.5	15	101.5	15	14.5	SR3.5	400

DIGITAL BORE GAUGE

SERIES 241

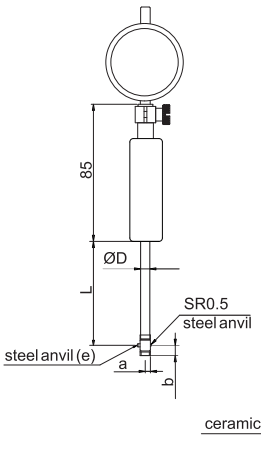

Range: 6-10mm

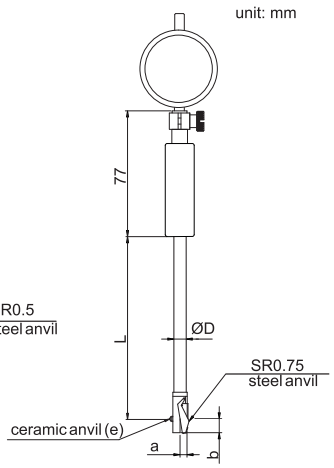

Range: 10-18mm

241-160-11

- Wooden handle isolate heat conduction
- With min. value tracking function, get the diameter automatically
- Optional accessory: series 531 setting rings

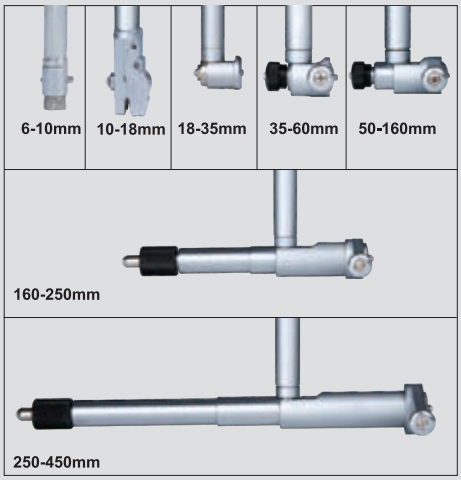

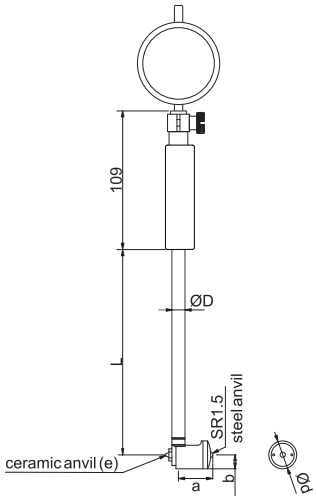

Range: 18-35mm

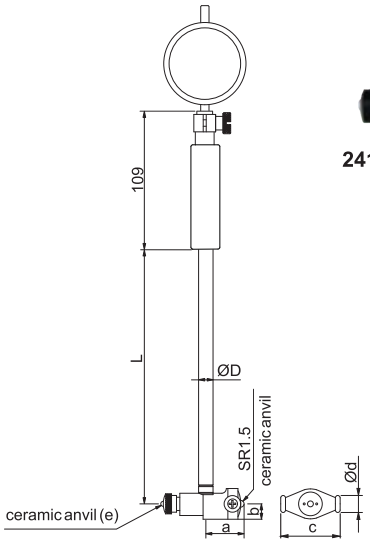

Range: 35mm - 450mm

Code	Range	Digital indicator	Accuracy	Repeatability	a	b	c	Ød	ØD	e	L
241-010-11	6-10mm	Range: 12.7mm resolution: 0.002mm	±0.012mm	3μm	3.6	5.7	/	/	4.5	SR1	48
241-018-11	10-18mm		±0.012mm	3μm	5.6	7.8	/	/	6	SR1	105
241-035-11	18-35mm		±0.015mm	3μm	12.2	6.4	/	12.7	9	SR1	141
241-060-11	35-60mm		±0.018mm	3μm	12.2	9	27	13	12.8	SR2	141
241-100-11	50-100mm		±0.018mm	3μm	26	9	35	13	12.8	SR2	141
241-160-11	50-160mm		±0.018mm	3μm	26	9	35	13	12.8	SR2	141
241-160-12	100-160mm		±0.018mm	3μm	26	9	35	13	12.8	SR2	141
241-250-11	160-250mm		±0.018mm	3μm	56.5	13	74.5	15	14.5	SR3.5	400
241-450-11	250-450mm		±0.018mm	3μm	86.5	15	101.5	15	14.5	SR3.5	400

244/254 BORE GAUGE

- Accuracy: 0.018mm
- Repeatability: 0.003mm

Dial type

Code	Range	Indicator
254-060-11	35-60mm	dial indicator: (Code: 222-010-12) range 10mm, graduation 0.01mm
254-160-11	50-160mm	
254-250-11	160-250mm	
254-450-11	250-450mm	

Digital type

Code	Range	Indicator
244-060-11	35-60mm	digital indicator (see picture) range: 12.7mm/0.5", graduation: 0.002mm/0.0001"
244-160-11	50-160mm	
244-250-11	160-250mm	
244-450-11	250-450mm	

digital indicator for series **244**

254-060-11

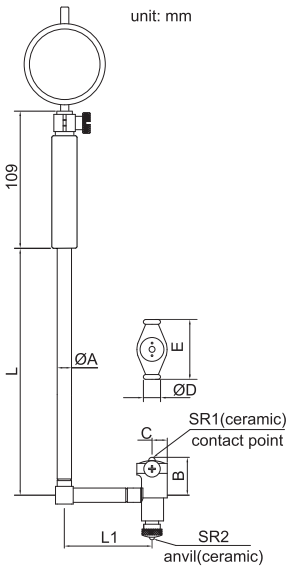

Range	ØA	B	C	ØD	E	L	L1
35-60mm	12.8	22	9	13	27	141	75
50-160mm	12.8	28.5	9.2	13	35	141	76.2
160-250mm	14.5	62.0	12.7	15	74.5	391	100
250-450mm	14.5	91.5	15.0	15	101.5	391	100

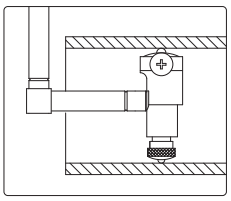

243/253 BORE GAUGE

digital indicator for **243-800-11**

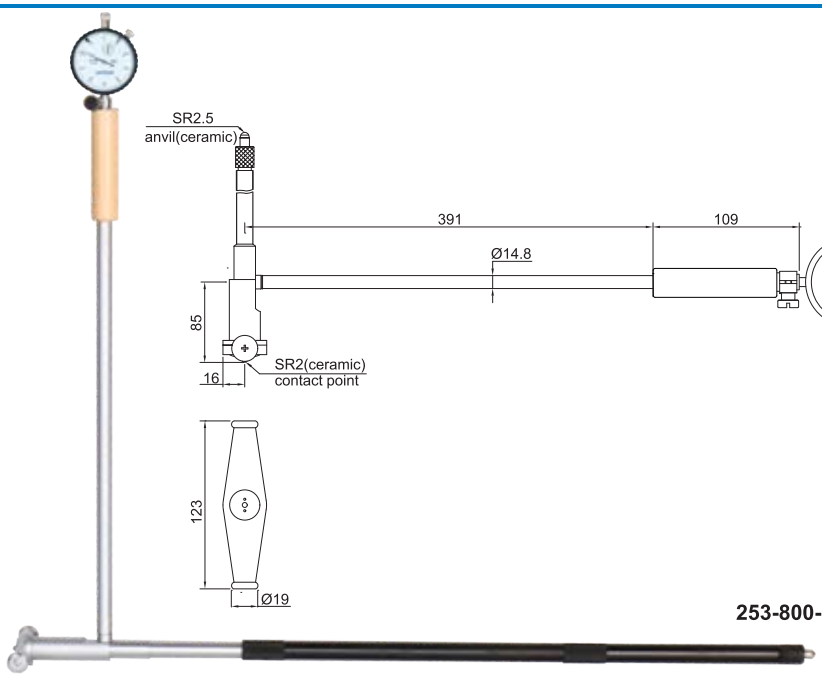

253-800-11

Code	Range	Accuracy	Repeatability	Indicator
253-800-11	400-800mm	±0.025mm	0.003mm	dial indicator (Code: 222-010-12) range 10mm, graduation 0.01mm
243-800-11	400-800mm	±0.025mm	0.003mm	digital indicator (see picture) range 12.7mm, resolution 0.002mm/0.0001"

INCH DIAL BORE GAUGE

SERIES 252

- Wooden handle isolate heat conduction
- Optional accessory: Long handle series 250

unit: mm

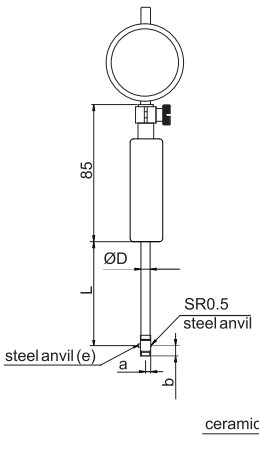

Range: 0.24-0.4"

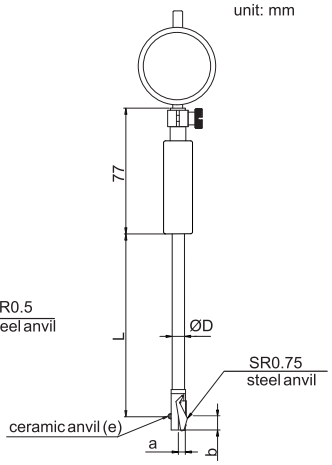

Range: 0.4-0.7"

252-015-11

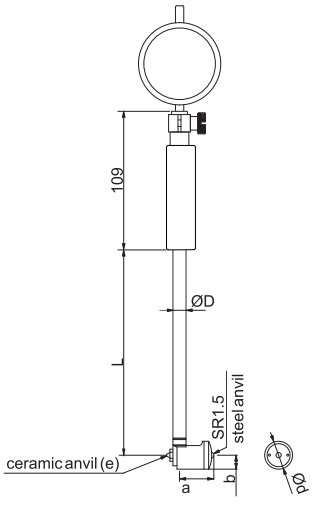

Range: 0.7-1.5"

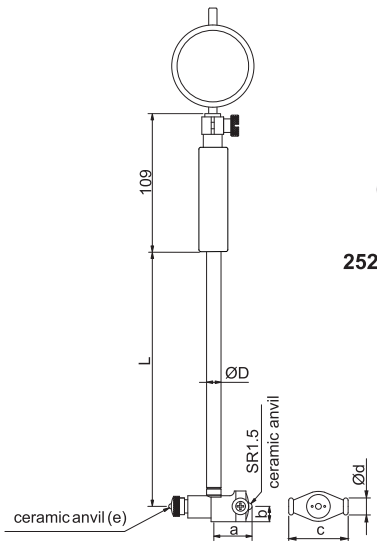

Range: 1.4- 16"

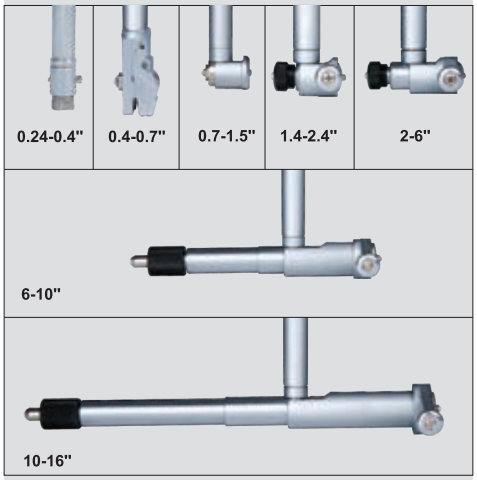

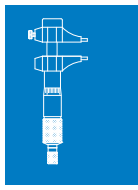

Code	Range	Digital indicator	Accuracy	Repeatability	a	b	c	Ød	ØD	e	L
252-004-11	0.24-0.4"	dial indicator, range 0.25", graduation 0.0005"	±0.00075"	0.00015"	3.6	5.7	/	/	4.5	SR1	48
252-007-11	0.4-0.7"		±0.00075"	0.00015"	5.6	7.8	/	/	6	SR1	105
252-015-11	0.7-1.5"		±0.00075"	0.00015"	12.2	6.4	/	12.7	9	SR1	141
252-024-11	1.4-2.4"		±0.0009"	0.00015"	26	9	27	13	12.8	SR2	141
252-060-11	2-6"		±0.0009"	0.00015"	26	9	35	13	12.8	SR2	141
252-100-11	6-10"		±0.0009"	0.00015"	56.5	13	74.5	15	14.5	SR3.5	400
252-160-01	10-16"		±0.0009"	0.00015"	86.5	15	101.5	15	14.5	SR3.5	400

SERIES 250 ANVIL FOR BORE GAUGES

- Measuring face is made of ceremic

250-160-11

Code	For Bore Gauges	QTY. per Set	Measuring Tip Material	Measuring Range of Anvil (mm)
250-010-11	6-10mm	9pcs	steel	6, 6.5, 7, 7.5, 8, 8.5, 9, 9.5, 10
250-018-11	10-18.5mm	9pcs	ceramic	10, 11, 12, 13, 14, 15, 16, 17, 18
250-035-11	18-35mm	9pcs	ceramic	18, 20, 22, 24, 26, 28, 30, 32, 34
250-060-11	35-60mm	6pcs	ceramic	35, 40, 45, 50, 55, 60
250-100-11	50-100mm	11pcs	ceramic	50, 55, 60, 65, 70, 75, 80, 85, 90, 95, 100
250-160-11	50-160mm	12pcs	ceramic	50, 55, 60, 65, 70, 75, 80, 85, 90, 95, 100, 105
250-160-12	100-160mm	12pcs	ceramic	50, 55, 60, 65, 70, 75, 80, 85, 90, 95, 100, 105
250-250-11	160-250mm	5pcs	ceramic	160, 170, 180, 190, 200
250-450-11	250-450mm	5pcs	ceramic	250, 260, 270, 280, 290

SERIES 250 LONG HANDLE

- To assist deep-hole measurement

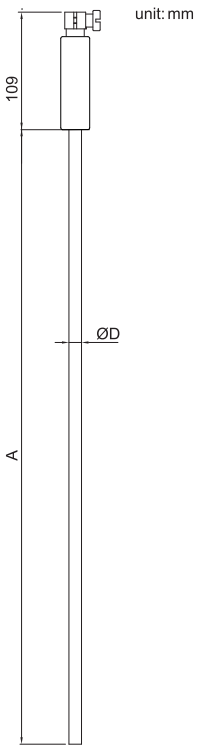

Code	For Bore Gauges	A	ØD
250-000-01	35-60mm, 50-100mm, 50-160mm, 100-160mm	473	13
250-000-02		980	13
250-000-03	160-250mm, 250-450mm	480	14.5
250-000-04		980	14.5

BORE GAUGE SETTER

SERIES 256

- Can be used in vertical and horizontal
- To be used with gage blocks

unit:mm

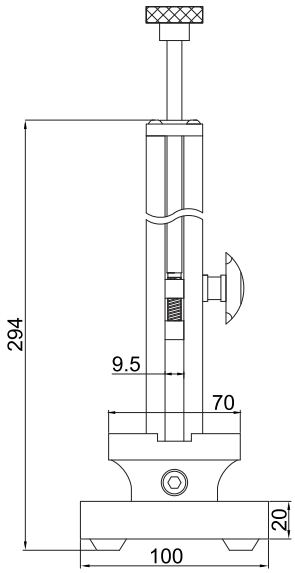

Application

Gage block set for 256-160-11

Gage block set (grade 2,ISO3650) for 256-160-11

Blocks per set	Size(mm)	Step(mm)	Quantity(pcs)
33	1.005		1
	1.01-1.09	0.01	9
	1.1-1.9	0.1	9
	1-9	1	9
	10-30	10	3
	50		1
	100		1

Code	Range	Repeatability	Gage block set
256-160-11	0-160mm	1.2μm	with
256-160-10	0-160mm	1.2μm	without

296 DIGITAL RADIUS GAUGE

- Measure radius of internal and external arcs
- Accuracy: ±0.01R, R is the radius to be measured in mm
- Data output (cable code: 200-01 or 200-02)
- Supplied with 5 jaws for different sizes of arc

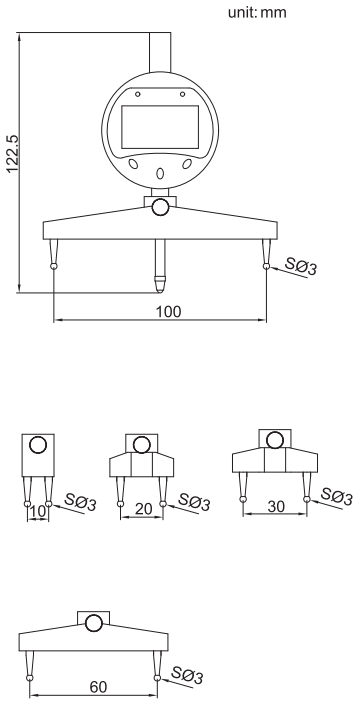

Code	Range of radius	Resolution
296-700-11	5-700mm/0.2-27.5"	0.01mm/0.001"

SERIES 956 CIRCUMFERENCE TAPE

- Measure diameter and circumference of pipes, trees, etc.
- Guaduation: 0.1mm
- Accuracy:
  Circumference:±1.5mm
  Diamater: ±0.5mm
- Laser engraved scale
- Made of stainless steel

956-012-11

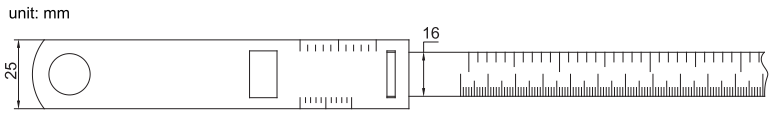

Code	Range	
	Diameter	Circumference
956-012-11	20 - 300mm	60 - 950mm
956-028-11	300 - 700mm	940 - 2200mm
956-044-11	700 - 1100mm	2190 - 3460mm

LINEAR GAUGE SERIES 201

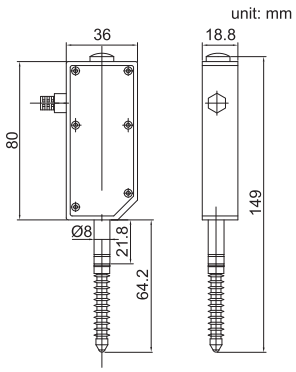

- Suitable for measuring the height, thickness, squareness, coaxiality and so on.
- IP65 protection level
- High frequence:100 times/s, can measure high speed workpiece
- Output signal: 90° phase difference wave
- Standard cable length: 2m
- Long working life due to the special bearing

Single gauge application

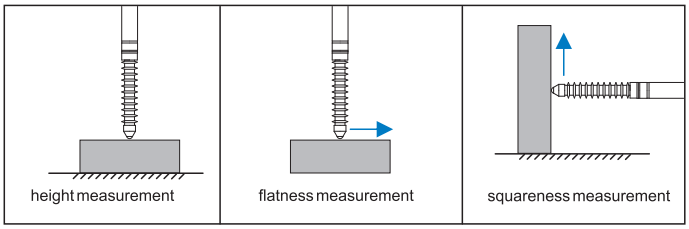

Multi-gauges application

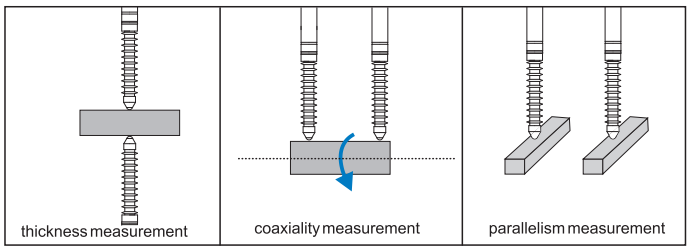

Code	Resolution	Interface	Range	Measuring force	Stem	Accuracy	Hysteresis
201-010-11	0.01mm	Pin4	0-12.7mm	1.5N	Ø8mm	20μm	10μm
201-010-12	0.01mm	RS232	0-12.7mm	1.5N	Ø8mm	20μm	10μm
201-010-01	0.001mm	Pin4	0-12.7mm	1.5N	Ø8mm	5μm	2μm
201-010-02	0.001mm	RS232	0-12.7mm	1.5N	Ø8mm	5μm	2μm

206 DISPLAY UNIT FOR LINEAR GAUGE

- High and low limits with judgement
- With external control
- With output I/O
- Power: DC9-24V

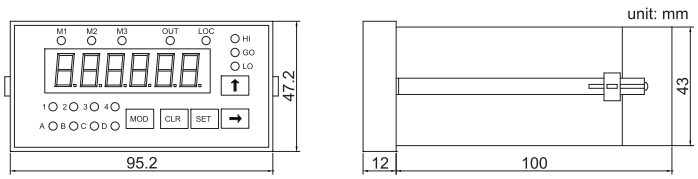

Code	Gage Input	Interface
206-010-01	1	Pin4

SERIES 208 COUNTER FOR LINEAR GAUGE

- With data recording software, can transfer the data into Excel

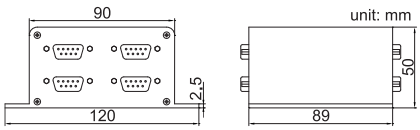

208-004-01

208-008-01

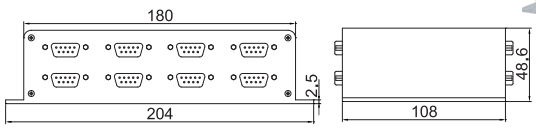

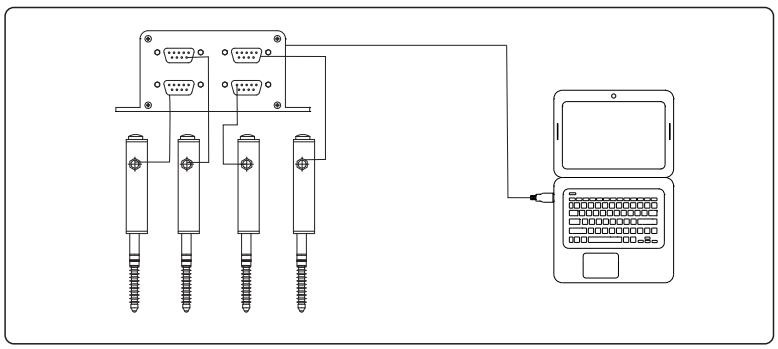

Code	Gages Input	Interface
208-004-01	4	RS232/485
208-008-01	8	RS232/485

DIGITAL INDICATOR SERIES 210

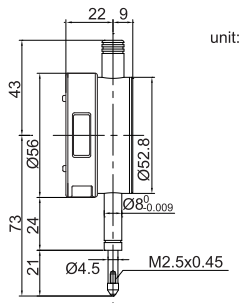

Range: 0-12.7mm

210-010-03

- Button: tolerance set, data preset, inch/mm conversion, measuring direction set, max./min./range measurement, absolute/incremental measurement
- Data output
- Automatic power off
- Supplied with flat and lug back

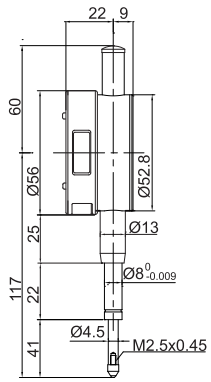

Range: 0-25.4mm

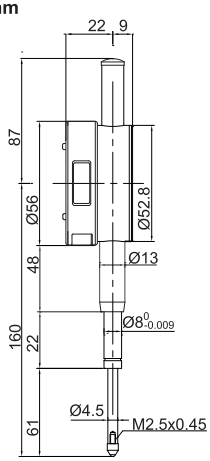

Range: 0-50.8mm

Code	Range	Resolution	Accuracy	Hysteresis
210-010-03	12.7mm/0.5"	0.001mm/0.00005"	5μm	2μm
210-025-03	25.4mm/1"	0.001mm/0.00005"	5μm	3μm
210-050-03	50.8mm/2"	0.001mm/0.00005"	6μm	3μm
210-010-13	12.7mm/0.5"	0.01mm/0.0005"	20μm	10μm
210-025-13	25.4mm/1"	0.01mm/0.0005"	20μm	10μm
210-050-13	50.8mm/2"	0.01mm/0.0005"	30μm	10μm

DIGITAL INDICATOR SERIES 211

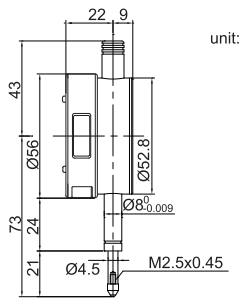

Range: 0-12.7mm

211-010-13

- With analog reading
- Button: tolerance set, data preset, inch/mm conversion, measuring direction set, max./min./range measurement, absolute/incremental measurement
- Data output
- Automatic power off
- Supplied with flat and lug back

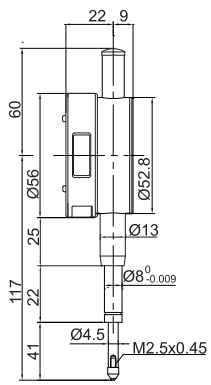

Range: 0-25.4mm

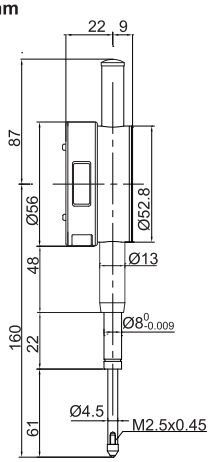

Range: 0-50.8mm

Code	Range	Resolution	Accuracy	Hysteresis
211-010-03	12.7mm/0.5"	0.001mm/0.00005"	5μm	2μm
211-025-03	25.4mm/1"	0.001mm/0.00005"	5μm	3μm
211-050-03	50.8mm/2"	0.001mm/0.00005"	6μm	3μm
211-010-13	12.7mm/0.5"	0.01mm/0.0005"	20μm	10μm
211-025-13	25.4mm/1"	0.01mm/0.0005"	20μm	10μm
211-050-13	50.8mm/2"	0.01mm/0.0005"	30μm	10μm

SERIES 212 DIGITAL INDICATOR

- Button: on/off, zero, inch/mm conversion, measuring direction set, data preset absolute/incremental measurement
- Data output
- Automatic power off
- Supplied with flat and lug back

212-010-13

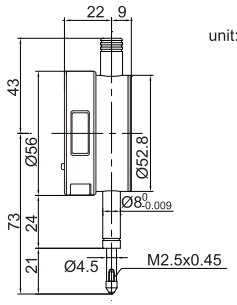

Range: 0-12.7mm

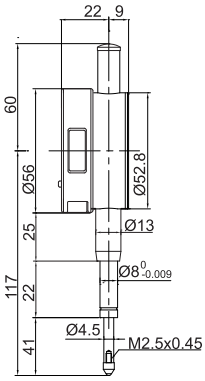

Range: 0-25.4mm

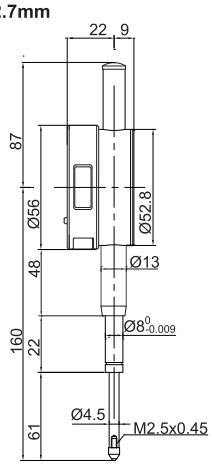

Range: 0-50.8mm

Code	Range	Resolution	Accuracy	Hysteresis
212-010-03	12.7mm/0.5"	0.001mm/0.00005"	5μm	2μm
212-025-03	25.4mm/1"	0.001mm/0.00005"	5μm	3μm
212-050-03	50.8mm/2"	0.001mm/0.00005"	6μm	3μm
212-010-13	12.7mm/0.5"	0.01mm/0.0005"	20μm	10μm
212-025-13	25.4mm/1"	0.01mm/0.0005"	20μm	10μm
212-050-13	50.8mm/2"	0.01mm/0.0005"	30μm	10μm

SERIES 213 WATERPROOF DIGITAL INDICATOR

- Dust/waterproof
- Button: on/off, zero, inch/mm conversion, measuring direction set, data preset absolute/incremental measurement
- Automatic power off
- Data output
- Supplied with lug and flat back

213-010-01

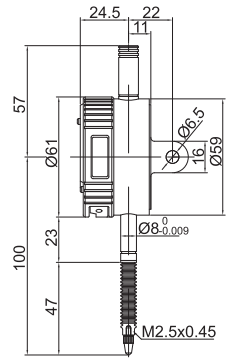

Range:0-12.7mm

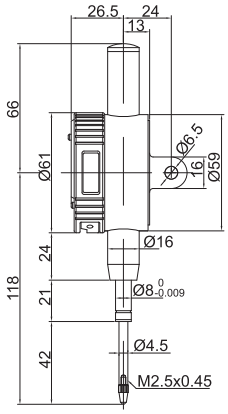

Range:0-25.4mm

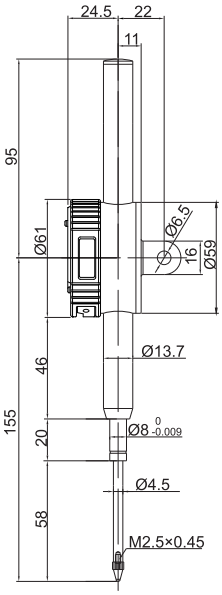

Range:0-50.8mm

Code	Range	Resolution	Proof Level	Accuracy	Hysteresis
213-010-01	12.7mm/0.5"	0.001mm/0.00005"	IP65	5μm	2μm
213-025-01	25.4mm/1"	0.001mm/0.00005"	IP54	5μm	3μm
213-050-01	50.8mm/2"	0.001mm/0.00005"	IP54	6μm	3μm
213-010-11	12.7mm/0.5"	0.01mm/0.0005"	IP65	20μm	10μm
213-025-11	25.4mm/1"	0.01mm/0.0005"	IP54	20μm	10μm
213-050-11	50.8mm/2"	0.01mm/0.0005"	IP54	30μm	10μm

DIGITAL INDICATOR SERIES 214

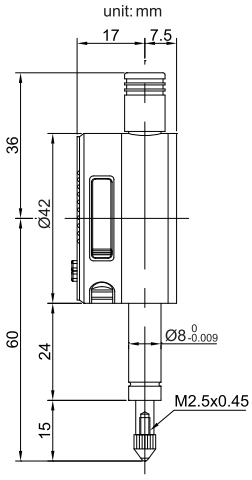

214-005-12

- Button: on/off, zero, inch/mm conversion, measuring direction set, data preset absolute/incremental measurement
- Automatic power off
- Data output
- Supplied with flat back

Code	Range	Resolution	Accuracy	Hysteresis
214-005-02	5mm/0.2"	0.001mm/0.00005"	5μm	3μm
214-005-12	5mm/0.2"	0.01mm/0.0005"	20μm	10μm

DIGITAL INDICATOR SERIES 214

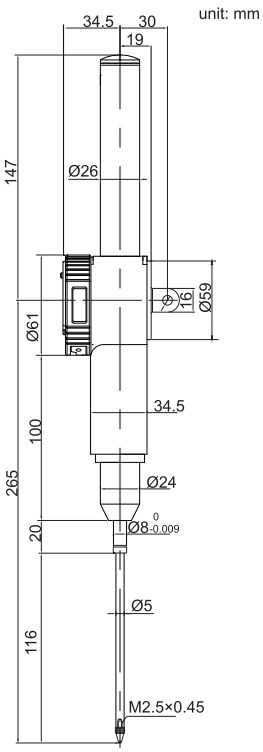

214-100-11

- Button: on/off, zero, inch/mm conversion, measuring direction set, data preset absolute/incremental measurement
- Automatic power off
- Data output
- Supplied with lug and flat back

Code	Range	Resolution	Accuracy	Hysteresis
214-100-01	100mm/4"	0.001mm/0.00005"	9μm	3μm
214-100-11	100mm/4"	0.01mm/0.0005"	30μm	10μm

SERIES 223 DIAL INDICATOR

- Graduation: 0.01mm
- With limit hands
- Range per revolution: 1mm
- With lock screw

223-010-11

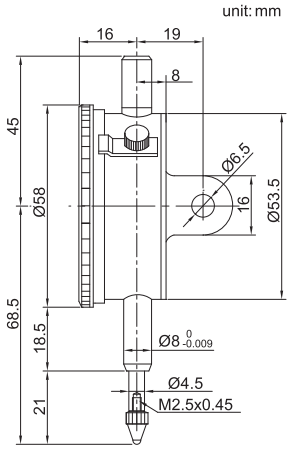

Code	Range	Back	Accuracy	Scale	Hysteresis
223-010-11	10mm	lug	20μm	0-100	3μm
223-010-12	10mm	flat	20μm	0-100	3μm

SERIES 222 DIAL INDICATOR

- Graduation: 0.01mm
- With limit hands
- Jeweled bearing
- Range per revolution: 1mm
- With lock screw

222-010-11

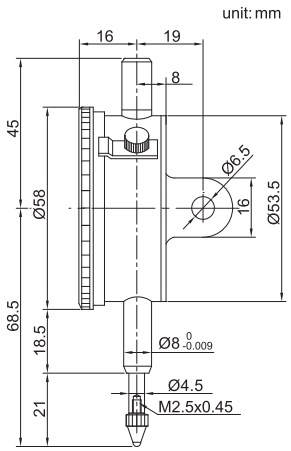

Code	Range	Back	Accuracy	Scale	Hysteresis
222-003-11	3mm	lug	14μm	0-100	3μm
222-005-11	5mm	lug	16μm	0-100	3μm
222-010-11	10mm	lug	20μm	0-100	3μm
222-003-12	3mm	flat	14μm	0-100	3μm
222-005-12	5mm	flat	16μm	0-100	3μm
222-010-12	10mm	flat	20μm	0-100	3μm

DIAL INDICATOR SERIES 222

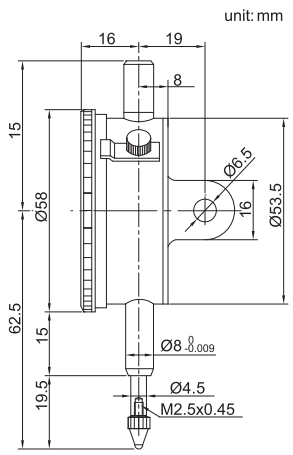

222-001-01

- Graduation: 0.001mm
- With limit hands
- Jeweled bearing
- Rang per revolution: 0.2mm
- With lock screw

Code	Range	Back	Scale	Accuracy	Hysteresis
222-001-01	1mm	lug	0-100-0	5μm	2μm
222-001-02	1mm	flat	0-100-0	5μm	2μm

DIAL INDICATOR SERIES 221

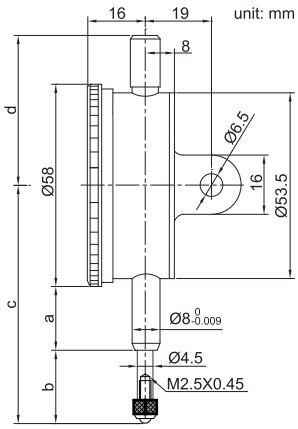

221-001-01

- Graduation: 0.001mm
- With limit hands
- Jeweled bearing
- Rang per revolution: 0.2mm
- Supplied with lug and flat back

Code	Range	Scale	Accuracy	Hysteresis	a	b	c	d
221-001-01	1mm	0-200	5μm	2μm	15	19.5	62.5	45
221-003-01	3mm	0-200	10μm	4μm	10	21.5	59.5	41.5
221-005-01	5mm	0-200	10μm	4μm	10	21.5	59.5	41.5

SERIES 226 SHOCKPROOF DIAL INDICATOR

- Shockproof
- Graduation: 0.01mm
- With limit hands
- Jeweled bearing
- Rang per revolution: 1mm
- Supplied with lug and flat back

226-010-11

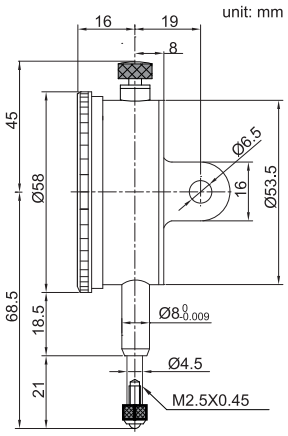

Code	Range	Accuracy	Hysteresis	Scale
226-005-11	5mm	16μm	3μm	0-100
226-010-11	10mm	20μm	3μm	0-100

SERIES 228 DIAL INDICATOR

- Bezel: Ø40mm
- Graduation: 0.01mm
- With limit hands
- Jeweled bearing
- Rang per revolution: 1mm
- Supplied with lug and flat back

228-005-11

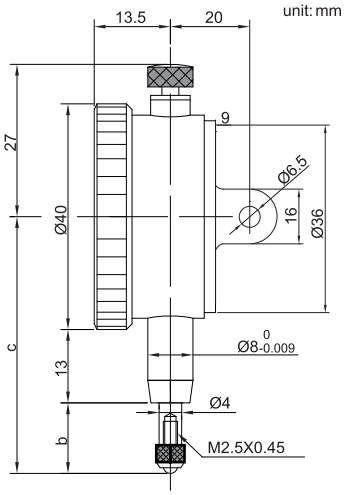

Code	Range	Accuracy	Hysteresis	Scale	b	c
228-003-11	3mm	14μm	3μm	0-100	11mm	44mm
228-005-11	5mm	16μm	3μm	0-100	12.5mm	45.5mm

DIAL INDICATOR SERIES 229

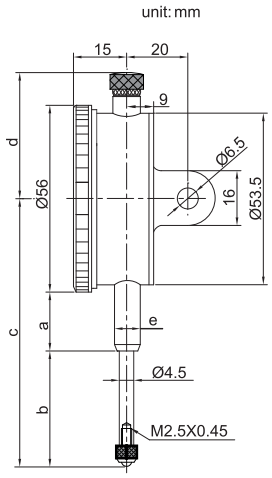

229-030-11

- Graduation: 0.01mm
- With limit hands
- Rang per revolution: 1mm
- Supplied with lug and flat back

Code	Range	Accuracy	Hysteresis	Scale	a	b	c	d	e
229-020-11	20mm	25μm	5μm	0-100	20mm	35mm	83mm	37.5mm	Ø8mm
229-025-11	25mm	35μm	7μm	0-100	20mm	40mm	88mm	37.5mm	Ø8mm
229-030-11	30mm	35μm	7μm	0-100	20mm	40mm	88mm	37.5mm	Ø8mm
229-050-21	50mm	40μm	8μm	0-100	40mm	58mm	127mm	108mm	Ø8mm
229-100-21	100mm	50μm	9μm	0-100	60mm	108mm	207mm	168mm	Ø10mm

WATERPROOF DIAL INDICATOR 231

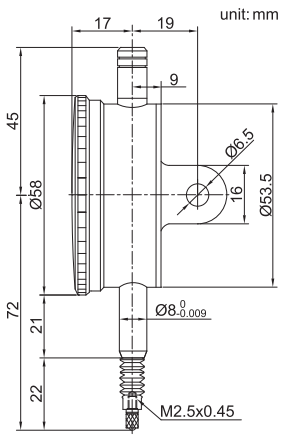

- IP54 dust/waterproof
- Graduation:0.01mm
- Jeweled bearing

Code	Range	Accuracy(f_{ges})	Hysteresis(f_u)	Range/rev	Dial reading
231-010-11	10mm	17μm	3μm	1mm	0-100

SERIES 232 ONE REVOLUTION DIAL INDICATOR

- Shock proof

232-001-11

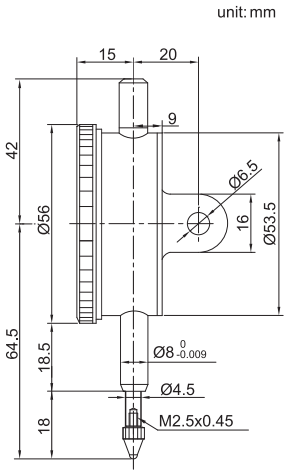

Code	Range	Graduation	Accuracy	Hysteresis	Dial reading
232-0005-11	0.5mm	0.01mm	9μm	3μm	25-0-25
232-001-11	1mm	0.01mm	9μm	3μm	50-0-50

SERIES 225 INCH DIAL INDICATOR

- Supplied with limit hands and bezel clamp
- Lug back

225-025-11

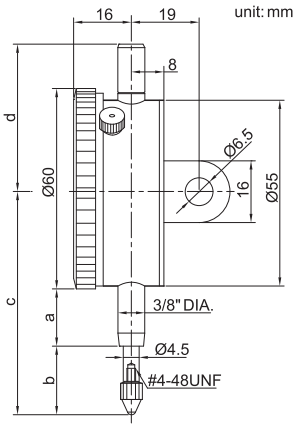

Code	Range	Graduation	Dial reading	Range/rev	Accuracy(f_{ges})	a	b	c	d
225-006-11	0.25"	0.001"	0-100	0.1"	0.004"	20	25	75	46
225-012-11	0.5"	0.001"	0-100	0.1"	0.004"	20	25	75	46
225-025-11	1"	0.001"	0-100	0.1"	0.004"	20	35	85	46
225-050-11	2"	0.001"	0-100	0.1"	0.008"	50	59	139	111

DIAL TEST INDICATOR 259

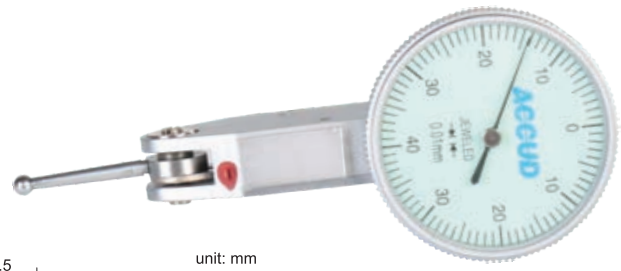

- Jeweled bearing
- Double scale spacing
- Anti-magnetic aluminium alloy body
- With two clamps: Ø4mm and Ø8mm

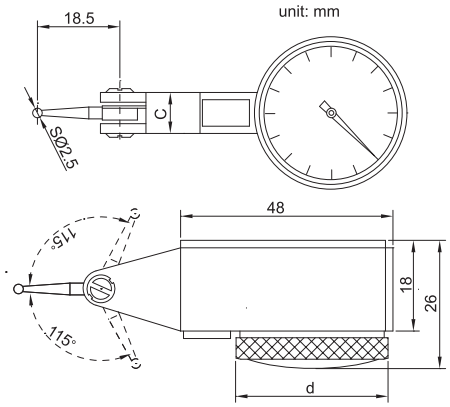

Clamp

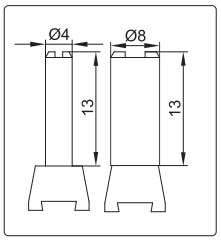

Code	Range	Bezel(d)	Graduation	Styli	Accuracy	Hysteresis	Scale	C
259-008-11	0.8mm	Ø31mm	0.01mm	steel	13μm	3μm	0-40-0	8.3mm

DIAL TEST INDICATOR SERIES 261

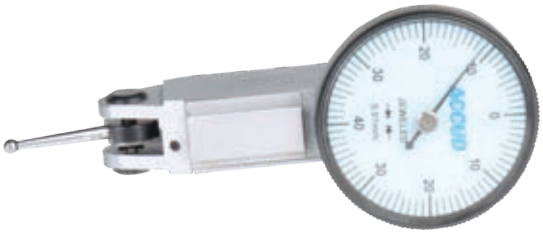

261-008-12

- Jeweled bearing
- Double scale spacing
- Anti-magnetic copper body
- With two clamps: Ø4mm and Ø8mm

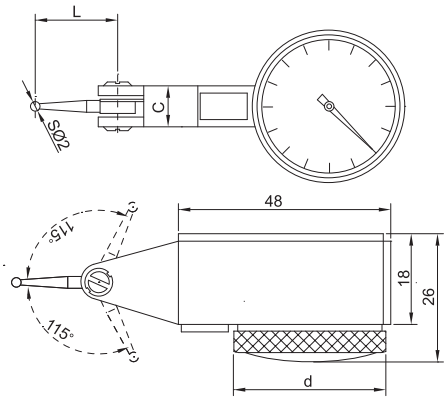

Clamp

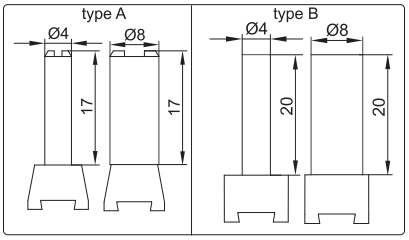

Code	Range	Bezel(d)	Graduation	Styli	Clamp	Accuracy	Hysteresis	Scale	C	L
261-008-11	0.8mm	Ø30mm	0.01mm	carbide	type A	13μm	3μm	0-40-0	8.9	16.5
261-008-12	0.8mm	Ø37.5mm	0.01mm	carbide	type A	13μm	3μm	0-40-0	8.9	16.5
261-002-01	0.2mm	Ø30mm	0.002mm	ruby	type B	6μm	2μm	0-100-0	8	17
261-002-02	0.2mm	Ø37.5mm	0.002mm	ruby	type B	6μm	2μm	0-100-0	8	17

263 LONG STYLI DIAL TEST INDICATOR

- Jeweled bearing
- Double scale spacing
- Anti-magnetic copper body
- With two clamps: Ø4mm and Ø8mm

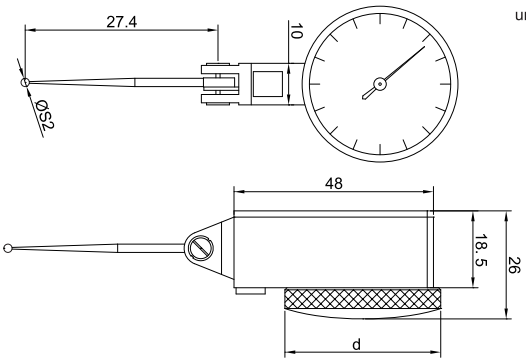

Clamp

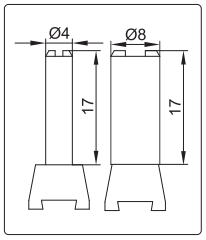

Code	Range	Bezel(d)	Graduation	Styli	Accuracy	Hysteresis	Scale
263-008-11	0.8mm	Ø37.5mm	0.01mm	carbide	13μm	3μm	0-40-0

264 BACK PLUNGER TYPE DIAL TEST INDICATOR

- Jeweled bearing
- Carbide contact point
- Two measuring directions
- Anti magnetic body
- Supplied with two clamps: diameter Ø4mm and Ø8mm
- Optional accessory: styli

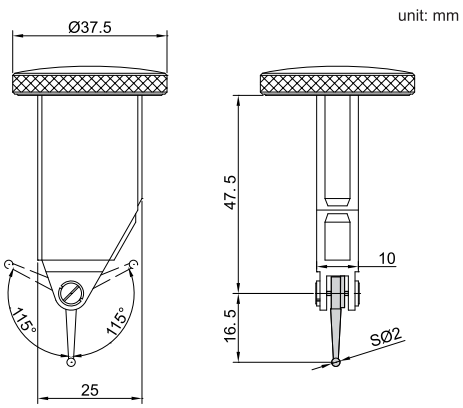

Clamps

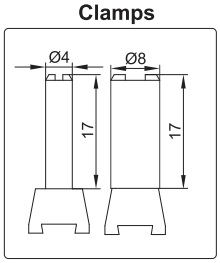

Code	Range	Graduation	Accuracy(f_{ges})	Hysteresis(f_u)	Dial Reading
264-008-11	0.8mm	0.01mm	13μm	3μm	0-40-0

DIAL TEST INDICATOR 265

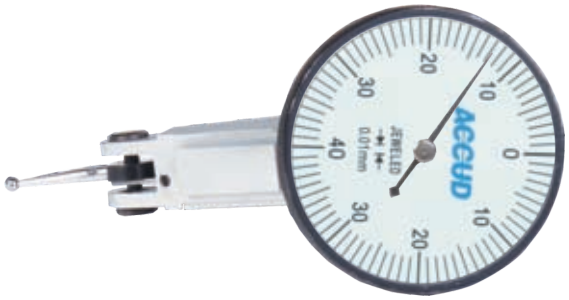

- Jeweled bearing
- Carbide contact point
- Two measuring directions
- Anti magnetic body
- Supplied with two clamps: diameter Ø4mm and Ø8mm
- Optional accessory: styli

unit: mm

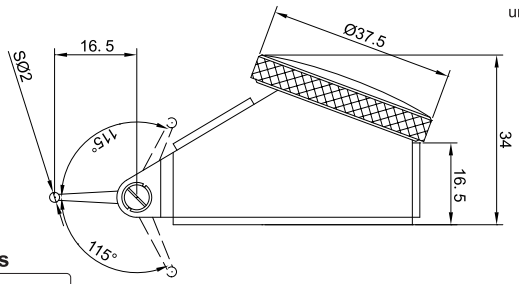

Clamps

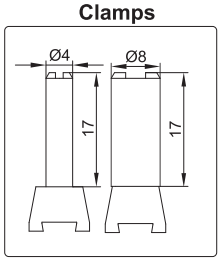

Code	Range	Graduation	Accuracy	Hysteresis	Dial Reading
265-008-11	0.8mm	0.01mm	13μm	3μm	0-40-0

LARGE RANGE DIAL TEST INDICATOR 266

- Jeweled bearing
- Carbide contact point
- Two measuring directions
- Anti magnetic body
- Supplied with two clamps: diameter Ø4mm and Ø8mm
- Optional accessory: styli

unit: mm

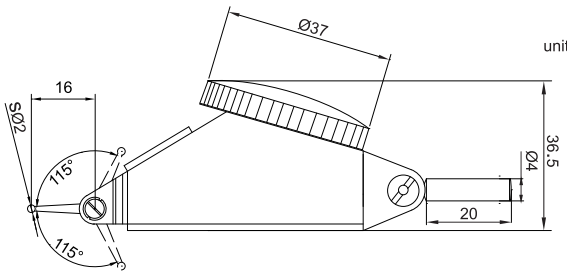

Clamps

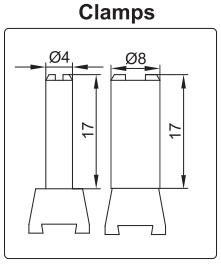

Code	Range	Graduation	Accuracy	Hysteresis	Dial reading
266-016-11	1.6mm	0.01mm	38μm	11μm	0-40-0

SERIES 260 STYLI FOR DIALTEST INDICATOR

260-002-02

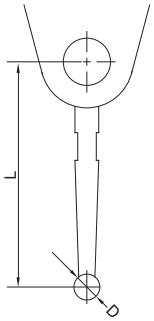

Code	For products	Tip material	D(mm)	L(mm)
260-001-01	261-008-11, 261-002-12, 266-016-11, 264-008-11, 265-008-11,	steel	SØ1	16.5
260-002-02		carbide	SØ2	16.5
260-003-02		carbide	SØ3	16.5
260-010-01		ruby	SØ2	16.5
260-009-01	261-002-01, 261-002-02	ruby	SØ2	17
260-010-02	263-008-01	carbide	SØ2	27.4

SERIES 267 HOLDER FOR INDICATOR

- Use as holder for dial/digital indicators, dial test indicators and height gages

267-115-02

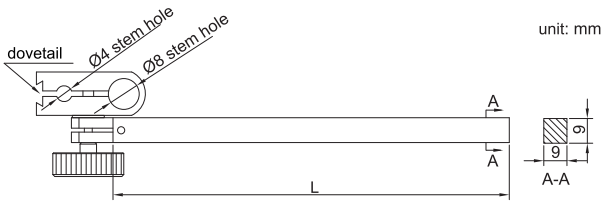

267-050-01 and **267-100-01**

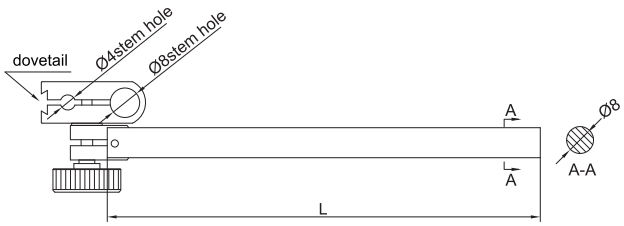

267-115-02

Code	Section size	Size(L)
267-050-01	9x9mm	50mm
267-100-01	9x9mm	100mm
267-115-02	Ø8mm	115mm

UNIVERSAL HOLDER FOR DIAL TEST INDICATOR 268

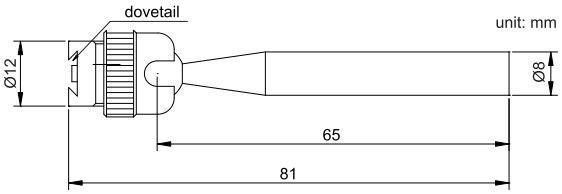

- Universal head

Code	Section size	Size(L)
268-055-01	Ø8mm	55mm

DIAL TEST INDICATOR CENTERING HOLDER 269

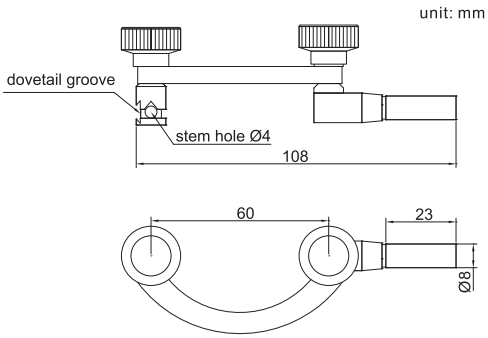

- Center cylinders or holes on a machine tool

Code
269-060-01

SERIES 270

CONTACT POINTS

Ball Point

270-001-01

type A

Code	Material	L(mm)
270-001-01	carbide	7.3
270-001-02	ceramic	7.3
270-001-03	carbide	8.3
270-001-04	carbide	12.1
270-001-05	carbide	14
270-001-06	carbide	15
270-001-07	ceramic	15
270-001-08	carbide	17
270-001-09	carbide	19.3
270-001-10	carbide	20
270-001-11	ceramic	20
270-001-12	carbide	22
270-001-13	carbide	25
270-001-14	ceramic	25
270-001-15	carbide	30
270-001-16	ceramic	30

type A

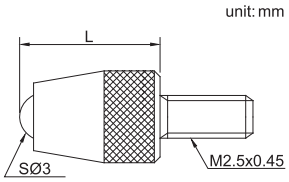

type B

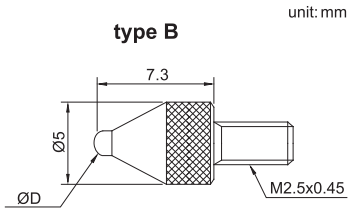

type B

Code	Material	ØD(mm)
270-001-21	steel	1
270-001-22	carbide	1.5
270-001-23	carbide	1.8
270-001-24	carbide	2.5
270-001-25	carbide	4

Shell Type Point

270-002-01

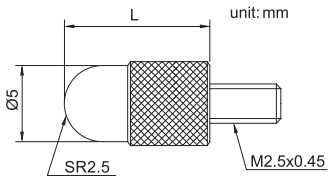

Code	Material	L(mm)
270-002-01	steel	5
270-002-02	steel	10
270-002-03	steel	15
270-002-04	steel	20
270-002-05	steel	25
270-002-06	steel	30

Spherical Point

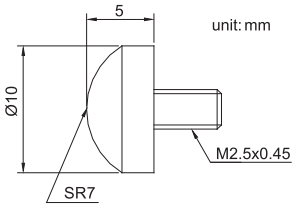

Code	Material
270-003-01	steel

Conical Point

270-004-01

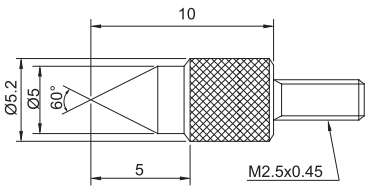

270-004-01

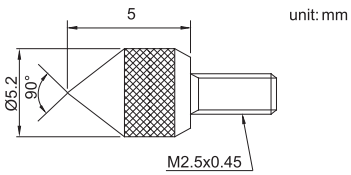

270-004-02

Code	Material
270-004-01	steel
270-004-02	steel

CONTACT POINTS

SERIES 270

Flat Point

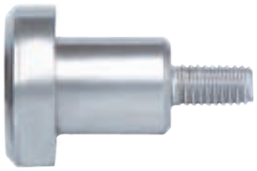

270-005-11

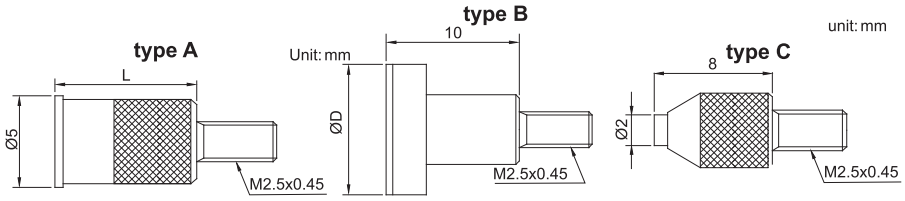

type A

Code	Material	L
270-005-01	steel	8
270-005-02	steel	10

type B

Code	Material	ØD
270-005-11	steel	10
270-005-12	steel	15
270-005-13	steel	20
270-005-14	steel	25
270-005-15	steel	30

type C

Code	Material
270-005-21	carbide

Needle Point

270-006-21

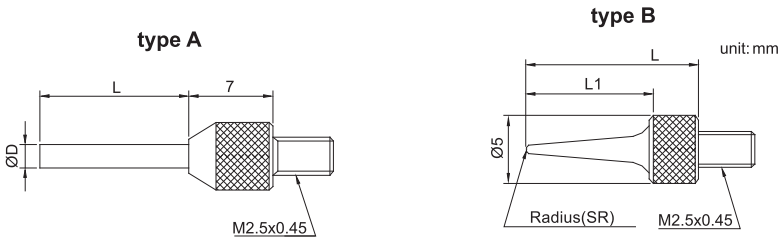

type B

Code	Material	L1	L	SR
270-006-21	steel	11	15	0.4
270-006-22	steel	13	17	0.2
270-006-23	steel	21	25	0.4
270-006-24	steel	31	35	0.4

type A

Code	Material	ØD	L
270-006-01	steel	0.45	3
270-006-02	steel	0.45	5
270-006-03	carbide	1	3
270-006-04	carbide	1	5
270-006-05	carbide	1	8
270-006-06	carbide	1	10
270-006-07	carbide	1	20
270-006-08	carbide	1	40
270-006-09	carbide	1.5	5
270-006-10	carbide	1.5	10
270-006-11	carbide	1.5	13
270-006-12	carbide	1.5	20
270-006-13	carbide	1.5	40
270-006-14	carbide	2	8
270-006-15	carbide	2	18
270-006-16	carbide	2	28
270-006-17	carbide	2	40

Knife Edge Point

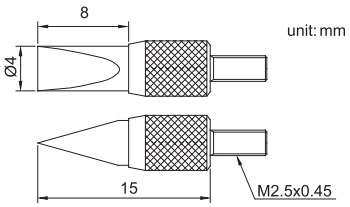

Code	Material
270-007-01	steel

Blade Point

270-008-01

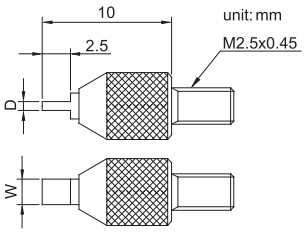

Code	Material	D	W
270-008-01	steel	0.4	2
270-008-02	steel	0.6	2
270-008-03	steel	1	4

SERIES 270 — EXTENSION ROD FOR CONTACT POINTS

270-000-13

unit: mm

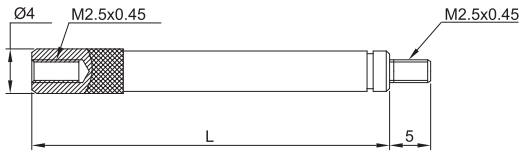

Code	Material	L
270-000-01	steel	10
270-000-02	steel	15
270-000-03	steel	20
270-000-04	steel	25
270-000-05	steel	30
270-000-06	steel	35
270-000-07	steel	40
270-000-08	steel	45
270-000-09	steel	50

Code	Material	L
270-000-10	steel	55
270-000-11	steel	60
270-000-12	steel	65
270-000-13	steel	70
270-000-14	steel	75
270-000-15	steel	80
270-000-16	steel	90
270-000-17	steel	100

SERIES 272 — LUG AND FLAT BACK

272-000-01

unit: mm

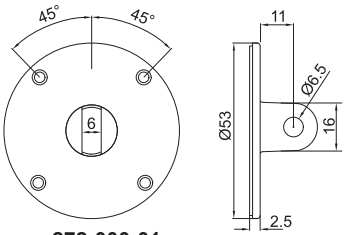

272-000-01

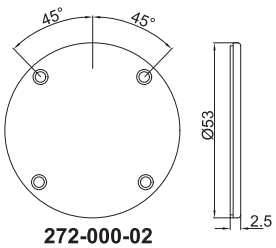

272-000-02

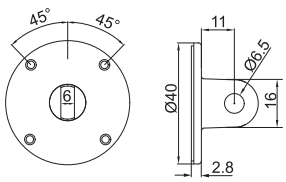

272-000-03

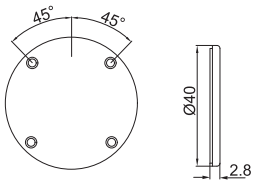

272-000-04

Code	Tpye	Material
272-000-01	lug	metal
272-000-02	flat	plastic
272-000-03	lug	metal
272-000-04	flat	plastic

MAGNETIC STAND SERIES 281

- For dial/digital indicators and dial test indicators
- V-block base

unit: mm

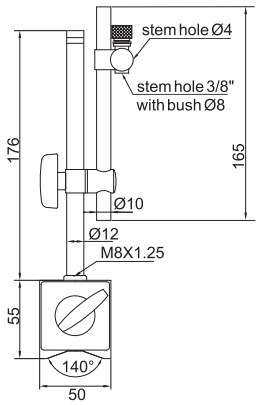

281-060-02

281-060-02

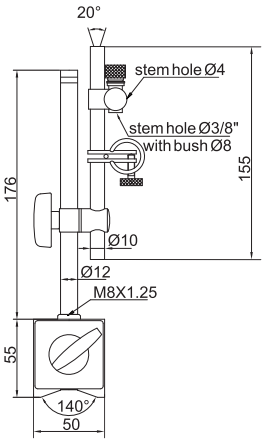

281-060-01

281-060-01

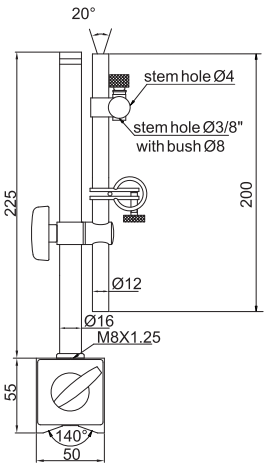

281-080-01

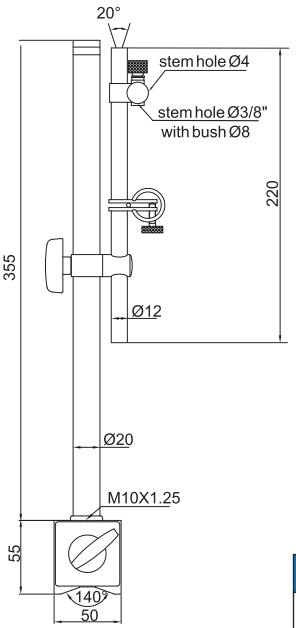

281-100-01

Code	Stem hole	Magnetic force	Fine adjustment
281-060-01	Ø8mm, Ø4mm, 3/8"	60kgf	With
281-060-02	Ø8mm, Ø4mm, 3/8"	60kgf	Without
281-080-01	Ø8mm, Ø4mm, 3/8"	80kgf	With
281-100-01	Ø8mm, Ø4mm, 3/8"	100kgf	With

SERIES 282 UNIVERSAL MAGNETIC STAND

- For dial/digital indicators and dial test indicators
- Stem hole: Ø8mm
- With find adjustment and dovetail
- V-block base

282-080-01

unit: mm

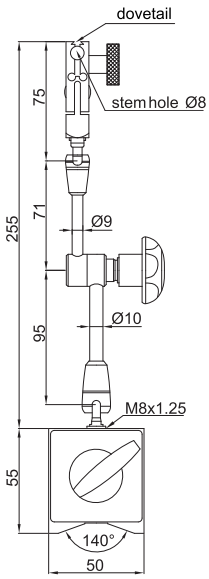

282-080-01

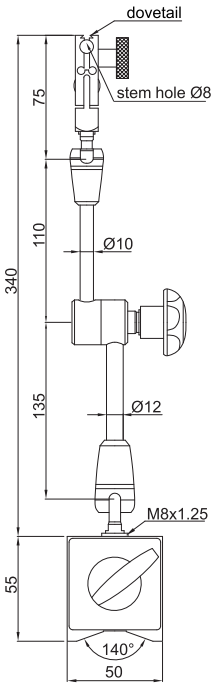

282-080-02

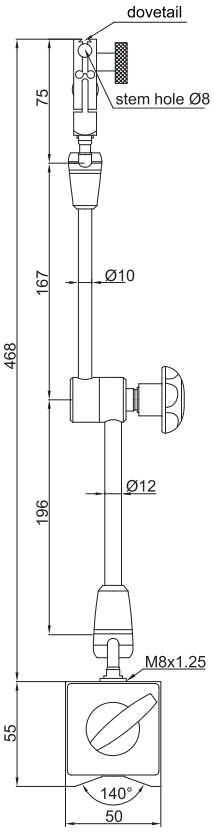

282-100-01

Code	Magnetic force
282-080-01	80kgf
282-080-02	80kgf
282-100-01	100kgf

UNIVERSAL MAGNETIC STAND 283

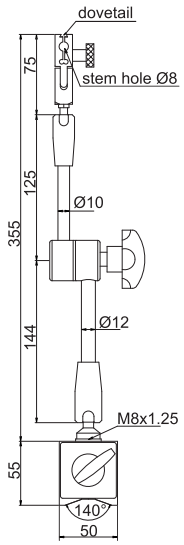

- Economic type
- For dial/digital indicators and dial test indicators
- Stem hole: Ø8mm
- With find adjustment and dovetail
- V-block base

Code	Magnetic force
283-080-01	80kgf

UNIVERSAL MAGNETIC STAND SERIES 279

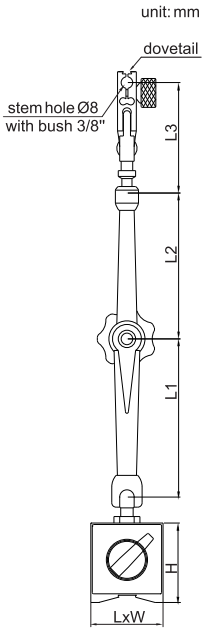

279-080-01

- For dial/digital indicators and dial test indicators
- Aluminum arm
- With fine adjustment and dovetail
- V-block base

Code	Magnetic force	Base (LxWxH)	L1	L2	L3
279-030-01	30kgf	35x30x35	56	51	73
279-080-01	80kgf	60x50x55	110	101	76
279-100-01	100kgf	73x50x55	147	225	76

SERIES 278 UNIVERSAL MAGNETIC STAND

- For dial/digital indicators and dial test indicators
- Super strong arm
- With fine adjustment and dovetail
- V-block base

278-080-01

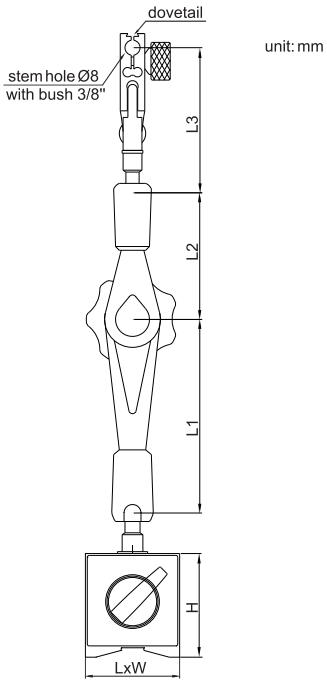

Code	Magnetic force	Base (LxWxH)	L1	L2	L3
278-050-01	50kgf	40x40x40	62	52	79
278-080-01	80kgf	60x50x55	100	67	81
278-100-01	100kgf	73x50x55	145	95	81

286 MINI MAGNETIC STAND

- For dial test indicators
- Stem hole: Ø8mm
- With find adjustment and dovetail
- V-block base

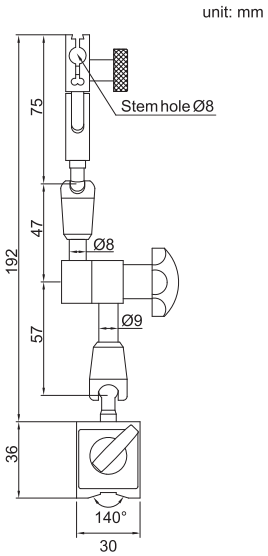

Code	Magnetic force	Stem hole
286-040-01	40kgf	Ø8mm

MINI MAGNETIC STAND 288

- For dial test indicators

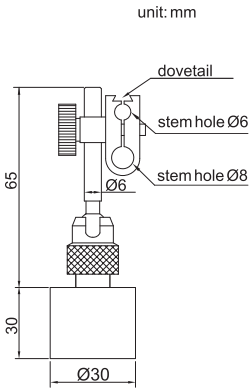

Code	Magnetic force	Stem hole
288-010-01	10kgf	Ø8mm, Ø6mm

FLEX ARM MAGNETIC STAND 285

- For dial test indicators

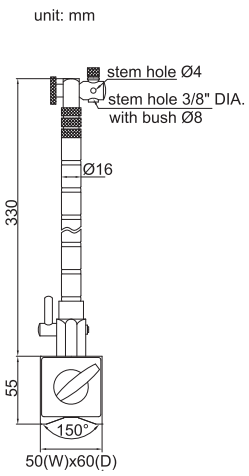

Code	Magnetic force	Applicable holding stem
285-080-01	80kgf	Ø8mm, Ø4mm, 3/8" DIA.

284 VACUUM STAND

- To be used on granite plates
- For digital/dial indicators and dial test indicators

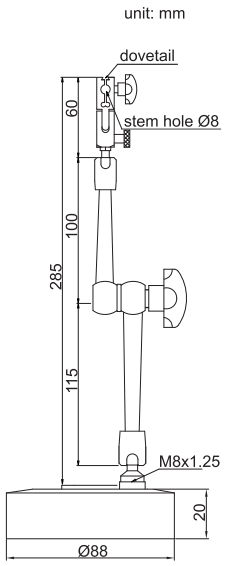

Code	Applicable holding stem	Remark
284-080-01	Ø8mm	with fine adjustment and dovetail groove

287 UNIVERSAL STAND

- For dial/digital indicators and dial test indicators

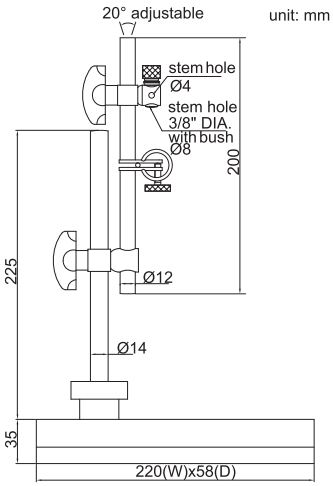

Code	Applicable holding stem	Remark
287-001-01	Ø8mm, Ø4mm, 3/8" DIA.	with fine adjustment

INDICATOR STAND WITH GRANITE BASE

SERIES 289

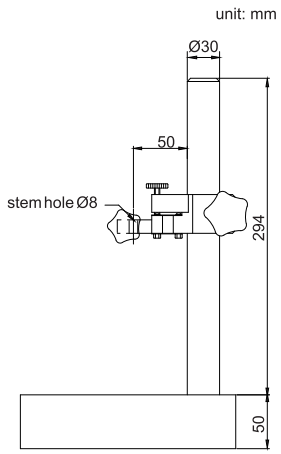

289-008-01

- Holder vertical travel: 150mm
- Fine adjustment range: 2mm

Code	Stem hole	Base flatness	Base size
289-008-01	Ø8mm	3.2μm	200x150mm
289-012-01	Ø8mm	3.2μm	300x200mm

INDICATOR STAND WITH CERAMIC BASE

SERIES 290

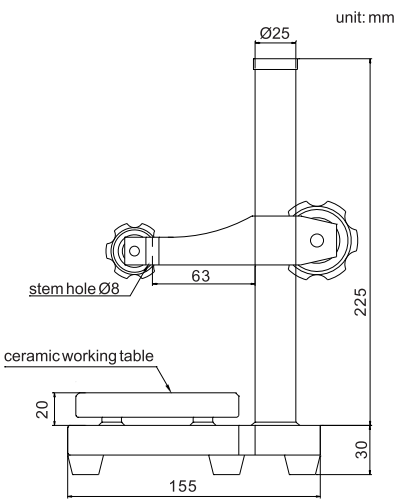

290-100-01

- Working table is made of ceramic
- Holder vertical travel: 150mm

Code	Stem hole	Ceramic flatness	Ceramic size
290-080-01	Ø8mm	1.5μm	Ø80mm
290-100-01	Ø8mm	1.5μm	100x100mm

SERIES 294 INDICATOR STAND

- Working table is made of steel
- Holder vertical travel: 100mm
- With fine adjustment: ±1.5mm
- Working table surface hardness is 60±2HRC

294-060-11

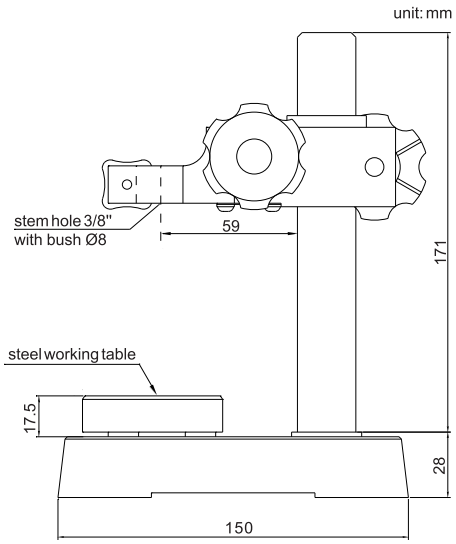

Code	Working table flatness	Working table size
294-060-11	1.5μm	Ø60mm
294-080-12	1.5μm	80x80mm

660 CONCENTRICITY GAUGE

- Optional accessories: dial test indicator (code: 261-002-01 or 261-002-02)and mini magnetic stand (code: 286-040-01)

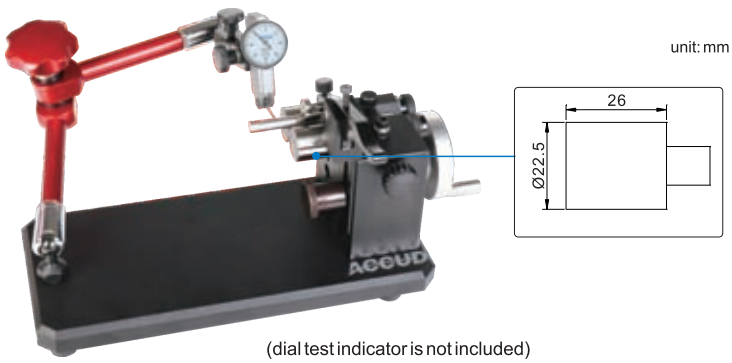

(dial test indicator is not included)

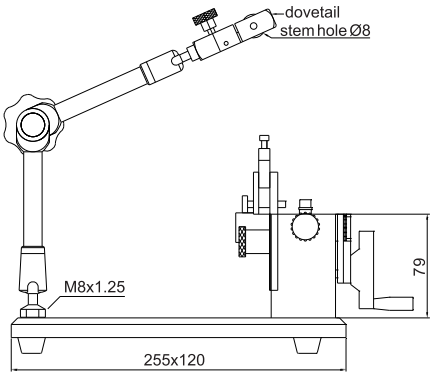

Code	Applicable diameter	Accuracy
660-001-01	Ø3-35mm	0.002mm

DIGITAL INTERNAL CALIPER GAUGE

SERIES 410

410-035-11

- Measure the internal dimension
- Resolution: 0.01mm/0.0005"

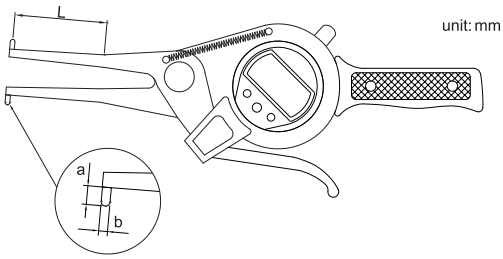

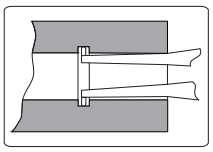

Code	Range	Accuracy	a	b	L
410-035-11	15-35mm	±0.04mm	3	Ø3	50
410-035-11L	15-35mm	±0.04mm	3	Ø3	200
410-055-11	35-55mm	±0.04mm	6	Ø3	80
410-055-11L	35-55mm	±0.04mm	6	Ø3	250
410-075-11	55-75mm	±0.04mm	8	Ø3	90
410-075-11L	55-75mm	±0.04mm	8	Ø3	250
410-095-11	75-95mm	±0.04mm	8	Ø3	100
410-115-11	95-115mm	±0.04mm	10	Ø3.2	120
410-135-11	115-135mm	±0.04mm	10	Ø3.2	120

INTERNAL DIAL CALIPER GAUGE

SERIES 411

411-035-11

- Measure the internal dimension
- Graduation: 0.01mm

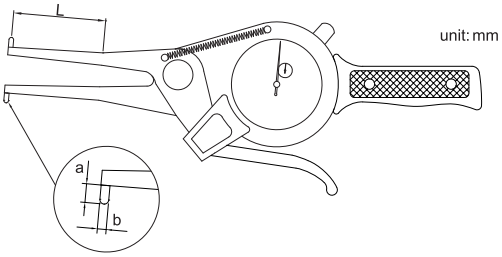

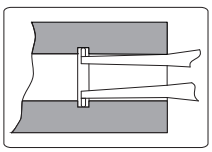

Code	Range	Accuracy	a	b	L
411-035-11	15-35mm	±0.04mm	3	Ø3	50
411-035-11L	15-35mm	±0.04mm	3	Ø3	200
411-055-11	35-55mm	±0.04mm	6	Ø3	80
411-055-11L	35-55mm	±0.04mm	6	Ø3	250
411-075-11	55-75mm	±0.04mm	8	Ø3	90
411-075-11L	55-75mm	±0.04mm	8	Ø3	250
411-095-11	75-95mm	±0.04mm	8	Ø3	100
411-115-11	95-115mm	±0.04mm	10	Ø3.2	120
411-135-11	115-135mm	±0.04mm	10	Ø3.2	120

SERIES 420 DIGITAL EXTERNAL CALIPER GAUGE

- Measure the external dimension
- Resolution: 0.01mm/0.0005"

420-020-11

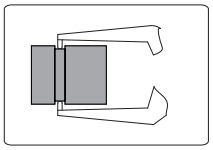

unit: mm

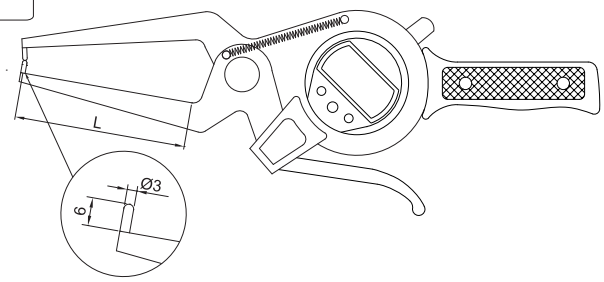

Code	Range	Accuracy	L
420-020-11	0-20mm	±0.04mm	60
420-040-11	20-40mm	±0.04mm	60
420-060-11	40-60mm	±0.04mm	55
420-080-11	60-80mm	±0.04mm	55
420-100-11	80-100mm	±0.04mm	55

SERIES 421 EXTERNAL DIAL CALIPER GAUGE

- Measure the external dimension
- Graduation: 0.01mm

421-020-11

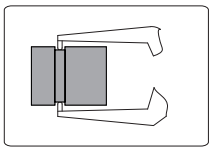

unit: mm

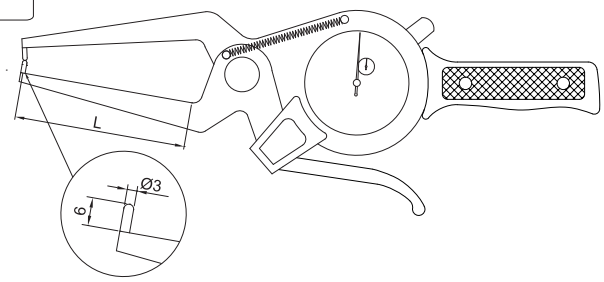

Code	Range	Accuracy	L
421-020-11	0-20mm	±0.04mm	60
421-040-11	20-40mm	±0.04mm	60
421-060-11	40-60mm	±0.04mm	55
421-080-11	60-80mm	±0.04mm	55
421-100-11	80-100mm	±0.04mm	55

THICKNESS GAUGE SERIES 441

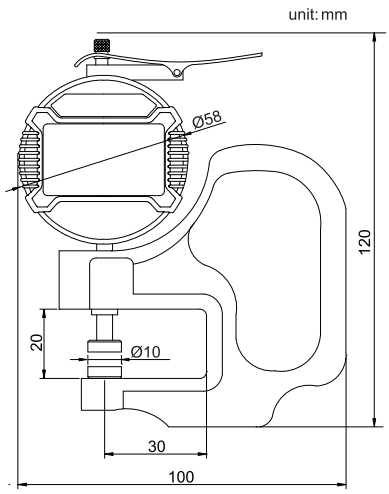

441-010-11

- Ceramic anvil
- Buttons: on/off, zero, mm/inch
- Automatic power off
- Data output

Code	Range	Resolution	Accuracy
441-010-01	0-10mm/0-0.4"	0.001mm/0.00005"	±0.005mm
441-010-11	0-10mm/0-0.4"	0.01mm/0.0005"	±0.02mm

THICKNESS GAUGE SERIES 443

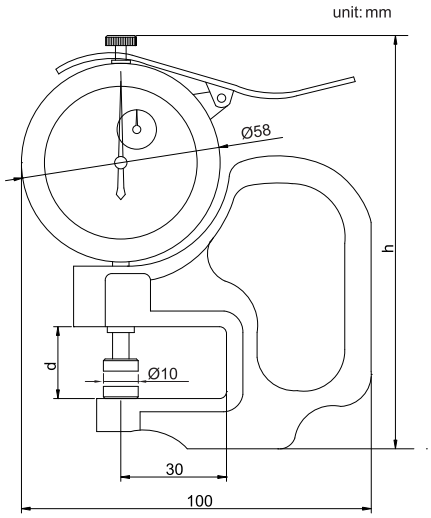

443-010-11

- Graduation: 0.01mm

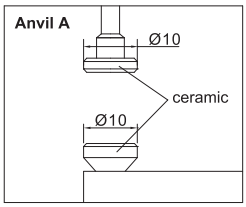

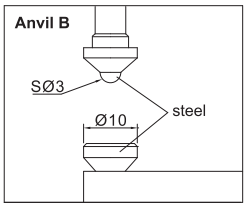

Code	Range	Accuracy	Anvil	d	h
443-010-11	0-10mm	±0.02mm	A	20	120
443-010-12	0-10mm	±0.02mm	B	20	120
443-030-11	0-30mm	±0.035mm	A	38	140

SERIES 444 THICKNESS GAUGE

- Large throat depth, for large workpiece measurement
- Graduation: 0.01mm

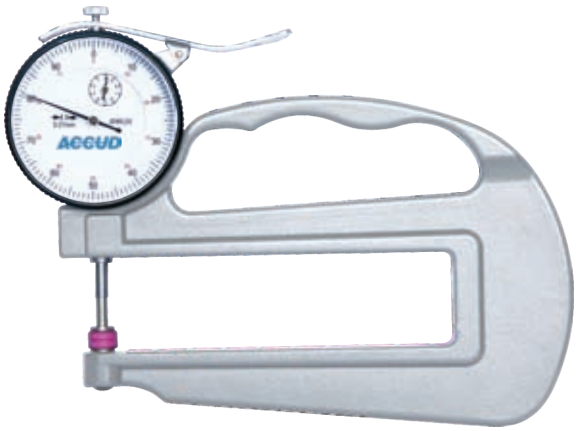

444-010-11

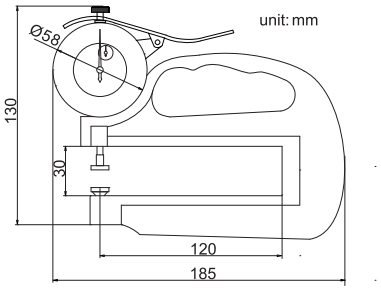

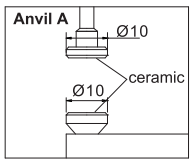

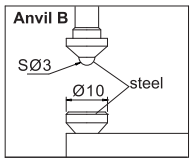

Code	Range	Accuracy	Anvil
444-010-11	0-10mm	±0.02mm	A
444-020-11	0-20mm	±0.03mm	A
444-010-12	0-10mm	±0.02mm	B
444-020-12	0-20mm	±0.03mm	B

SERIES 444 THICKNESS GAUGE

- Large throat depth, for large workpiece measurement
- Graduation: 0.01mm

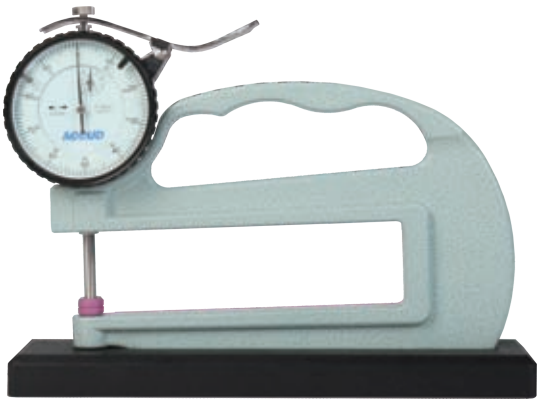

444-010-11B

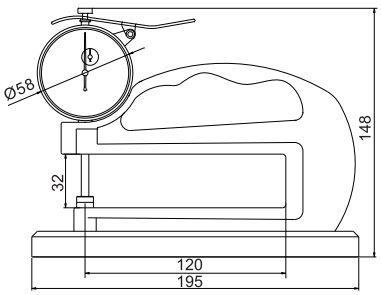

unit: mm

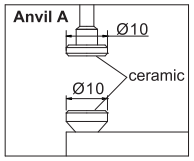

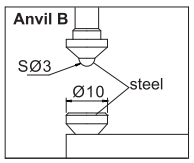

Code	Range	Accuracy	Anvil
444-010-11B	0-10mm	±0.02mm	A
444-020-11B	0-20mm	±0.03mm	A
444-010-12B	0-10mm	±0.02mm	B
444-020-12B	0-20mm	±0.03mm	B

THICKNESS GAUGE 446

unit: mm

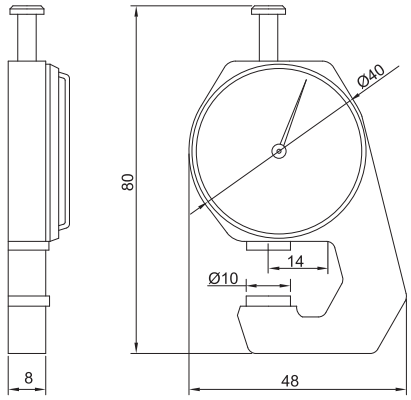

Code	Range	Graduation	Accuracy
446-010-11	0-10mm	0.1mm	±0.05mm

THICKNESS GAUGE 447

- Stainless steel spindle tip and anvil

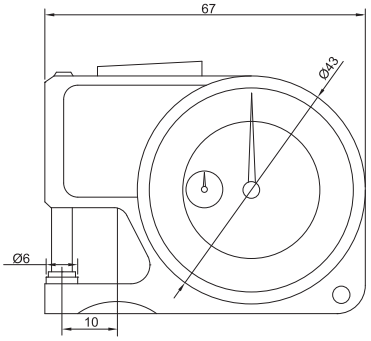

unit: mm

Code	Range	Graduation	Accuracy
447-010-11	0-10mm	0.01mm	±0.02mm

448 THICKNESS GAUGE

- Measure the wall thickness of tube

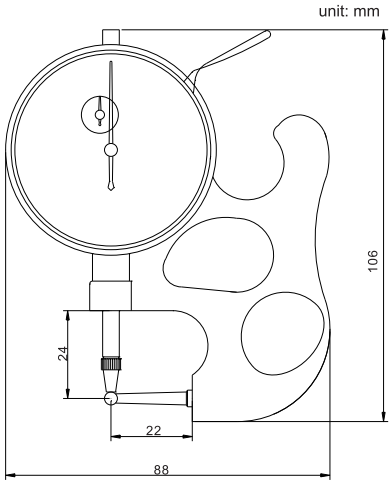

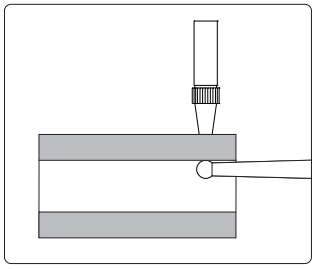

Code	Range	Accuracy	Graduation
448-010-11	0-10mm	±0.02mm	0.01mm

449 THICKNESS GAUGE

- Graduation: 0.01mm
- Steel tip, diameter: Ø10mm

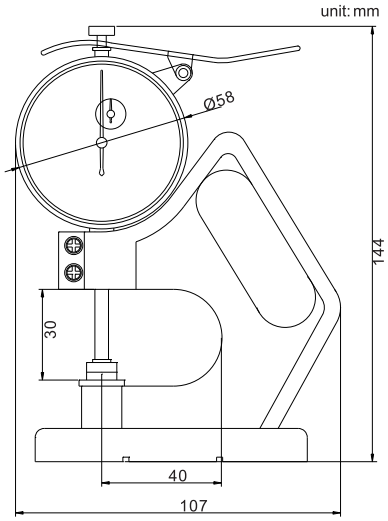

Code	Range	Accuracy
449-010-11	0-10mm	±0.02mm

THICKNESS GAUGE 451

unit: mm

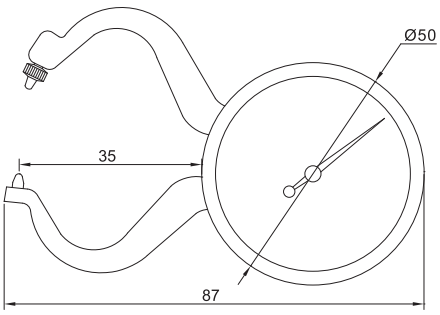

Code	Range	Graduation	Accuracy
451-010-11	0-10mm	0.05mm	±0.1mm

THICKNESS GAUGE SERIES 452

452-010-11

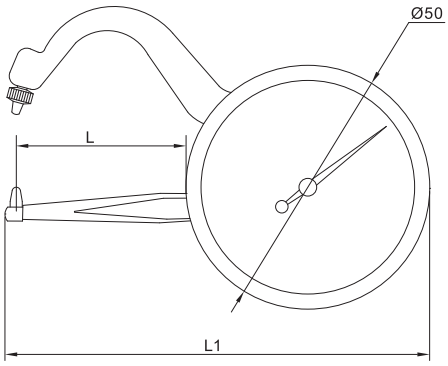

Code	Range	Graduation	Accuracy	L	L1
452-010-11	0-10mm	0.05mm	±0.1mm	35	85
452-010-12	0-10mm	0.05mm	±0.1mm	60	110

453 THICKNESS GAUGE WITH POINTED TIPS

- Pointed tips can be used for small grooves and recesses

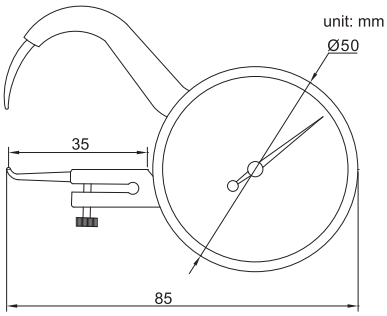

Code	Range	Graduation	Accuracy
453-010-11	0-10mm	0.05mm	±0.1mm

433 DIGITAL SNAP GAUGE

- Resolution: 0.01mm/0.0005"
- Buttons: on/off, zero, mm/inch
- Automatic power on/off
- Data output
- Made of stainless steel

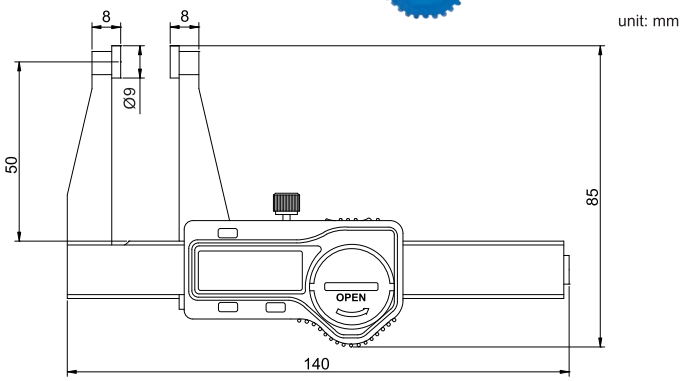

Code	Range	Accuracy
433-002-11	0-50mm/0-2"	±0.03mm

435 DIGITAL SNAP GAUGE

- Resolution: 0.01mm/0.0005"
- Buttons: on/off, zero, mm/inch
- Automatic power on/off
- Data output
- Made of stainless steel

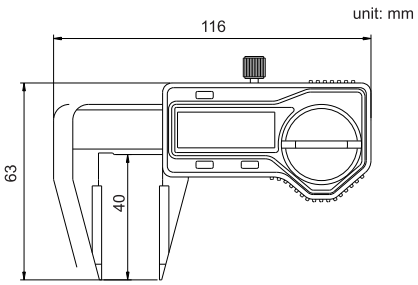

Code	Range	Accuracy
435-001-11	0-25mm/0-1"	±0.03mm

DIGITAL 3-PURPOSE SNAP GAUGE 436

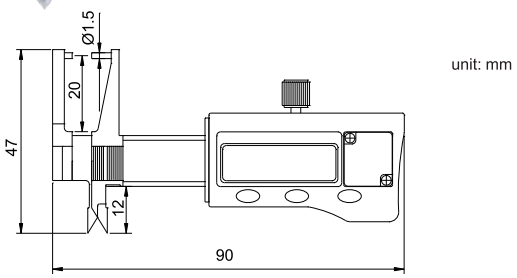

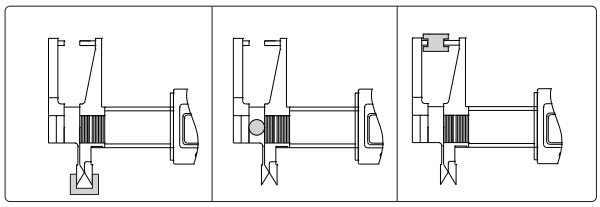

- Resolution: 0.01mm/0.0005"
- Buttons: on/off, zero, mm/inch
- Made of stainless steel

Code	Range	Accuracy
436-001-11	0-25mm/0-1"	±0.03mm

CRANKSHAFT TESTER SERIES 298

298-020-11

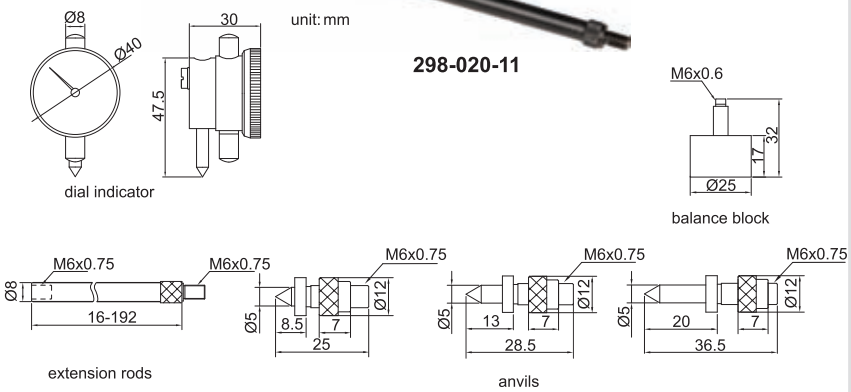

- To test crankshaft deflection
- The balance block is mounted on the back of dial indicator to keep the dial indicator facing up

Code	Range	Dial indicator Range	Graduation	Accuracy	Extension rods
298-012-11	60-300mm	3mm	0.01mm	±0.016mm	16mm, 32mm, 64mm, 128mm
298-020-11	60-500mm	3mm	0.01mm	±0.016mm	16mm, 32mm, 64mm, 96mm, 128mm, 192mm

SERIES 511 CERAMIC GAUGE BLOCK SET

- Made of ceramic
- Meet ISO 3650
- With calibration certificate
- Code explanation

511-□□□-□X
- 0: grade0
- 1: grade1

Example:

Code	Quantity	Grade
511-112-00	112	0
511-112-01	112	1

511-087-00

Code	Blocks per set	Block allocation		
		Size(mm)	Step(mm)	Quantity
511-112-0X	112	1.0005		1
		1.001-1.009	0.001	9
		1.01-1.49	0.01	49
		0.5-24.5	0.5	49
		25-100	25	4
511-103-0X	103	1.005		1
		1.01-1.49	0.01	49
		0.5-24.5	0.5	49
		25-100	25	4
511-088-0X	88	1.0005		1
		1.001-1.009	0.001	9
		1.01-1.49	0.01	49
		0.5-9.5	0.5	19
		10-100	10	10
511-087-0X	87	1.001-1.009	0.001	9
		1.01-1.49	0.01	49
		0.5-9.5	0.5	19
		10-100	10	10
511-076-0X	76	1.005		1
		1.01-1.49	0.01	49
		0.5-9.5	0.5	19
		10-40	10	4
		50-100	25	3
511-056-0X	56	0.5		1
		1.001-1.009	0.001	9
		1.01-1.09	0.01	9
		1.1-1.9	0.1	9
		1-24	1	24
		25-100	25	4

Code	Blocks per set	Block allocation		
		Size(mm)	Step(mm)	Quantity
511-047-0X	47	1.005		1
		1.01-1.09	0.01	9
		1.1-1.9	0.1	9
		1-24	1	24
		25-100	25	4
511-047-1X	47	1.005		1
		1.01-1.19	0.01	19
		1.2-1.9	0.1	8
		1-9	1	9
		10-100	10	10
511-046-0X	46	1.001-1.009	0.001	9
		1.01-1.09	0.01	9
		1.1-1.9	0.1	9
		1-9	1	9
		10-100	10	10
511-034-0X	34	1.0005		1
		1.001-1.009	0.001	9
		1.01-1.09	0.01	9
		1.1-1.9	0.1	9
		1-5	1	5
		10		1
511-032-0X	32	1.005		1
		1.01-1.09		9
		1.1-1.9	0.01	9
		1-9	0.1	9
		10-30	1	3
		50	10	1

STEEL GAUGE BLOCK SET

SERIES 512

512-087-02

- Made of steel
- Meet ISO 3650
- With calibration certificate
- Code explanation

512-□□□-□X
- 0: grade0
- 1: grade1
- 2: grade2

Example:

Code	Grade	Quantity
512-112-00	0	112
512-112-01	1	112
512-112-02	2	112

Code	Blocks per set	Block allocation		
		Size(mm)	Step(mm)	Quantity
512-122-0X	122	1.0005		1
		1.001-1.009	0.001	9
		1.01-1.49	0.01	49
		1.6-1.9	0.1	4
		0.5-24.5	0.5	49
		30-100	10	8
		25-75	50	2
512-112-0X	112	1.0005		1
		1.001-1.009	0.001	9
		1.01-1.49	0.01	49
		0.5-24.5	0.5	49
		25-100	25	4
512-103-0X	103	1.005		1
		1.01-1.49	0.01	49
		0.5-24.5	0.5	49
		25-100	25	4
512-088-0X	88	1.0005		1
		1.001-1.009	0.001	9
		1.01-1.49	0.01	49
		0.5-9.5	0.5	19
		10-100	10	10
512-087-0X	87	1.001-1.009	0.001	9
		1.01-1.49	0.01	49
		0.5-9.5	0.5	19
		10-100	10	10
512-083-0X	83	0.5		1
		1		1
		1.005		1
		1.01-1.49	0.01	49
		1.5-1.9	0.1	5
		2-9.5	0.5	16
		10-100	10	10
512-076-0X	76	1.005		1
		1.01-1.49	0.01	49
		0.5-9.5	0.5	19
		10-40	10	4
		50-100	25	3

Code	Blocks per set	Block allocation		
		Size(mm)	Step(mm)	Quantity
512-056-0X	56	0.5		1
		1.001-1.009	0.001	9
		1.01-1.09	0.01	9
		1.1-1.9	0.1	9
		1-24	1	24
		25-100	25	4
512-047-0X	47	1.005		1
		1.01-1.09	0.01	9
		1.1-1.9	0.1	9
		1-24	1	24
		25-100	25	4
512-047-1X	47	1.005		1
		1.01-1.19	0.01	19
		1.2-1.9	0.1	8
		1-9	1	9
		10-100	10	10
512-046-0X	46	1.001-1.009	0.001	9
		1.01-1.09	0.01	9
		1.1-1.9	0.1	9
		1-9	1	9
		10-100	10	10
512-034-0X	34	1.0005		1
		1.001-1.009	0.001	9
		1.01-1.09	0.01	9
		1.1-1.9	0.1	9
		1-5	1	5
		10		1
512-032-0X	32	1.005		1
		1.01-1.09	0.01	9
		1.1-1.9	0.1	9
		1-9	1	9
		10-30	10	3
		50		1
512-008-0X	8	125-175	25	3
		200-250	50	2
		300-500	100	3

SERIES 512 CARBIDE GAUGE BLOCK SET

- Made of carbide
- Meet ISO 3650
- With calibration certificate
- Code explanation

512-□□□-□XT
- 0: grade0
- 1: grade1

Example:

Code	Grade	Quantity
512-112-00T	0	112
512-112-01T	1	112

512-087-01T

Code	Blocks per set	Block allocation		
		Size(mm)	Step(mm)	Quantity
512-122-0XT	122	1.0005		1
		1.001-1.009	0.001	9
		1.01-1.49	0.01	49
		1.6-1.9	0.1	4
		0.5-24.5	0.5	49
		30-100	10	8
		25-75	50	2
512-112-0XT	112	1.0005		1
		1.001-1.009	0.001	9
		1.01-1.49	0.01	49
		0.5-24.5	0.5	49
		25-100	25	4
512-103-0XT	103	1.005		1
		1.01-1.49	0.01	49
		0.5-24.5	0.5	49
		25-100	25	4
512-087-0XT	87	1.001-1.009	0.001	9
		1.01-1.49	0.01	49
		0.5-9.5	0.5	19
		10-100	10	10
512-083-0XT	83	0.5		1
		1		1
		1.005		1
		1.01-1.49	0.01	49
		1.5-1.9	0.1	5
		2-9.5	0.5	16
		10-100	10	10

Code	Blocks per set	Block allocation		
		Size(mm)	Step(mm)	Quantity
512-076-0XT	76	1.005		1
		1.01-1.49	0.01	49
		0.5-9.5	0.5	19
		10-40	10	4
		50-100	25	3
512-047-0XT	47	1.005		1
		1.01-1.09	0.01	9
		1.1-1.9	0.1	9
		1-24	1	24
		25-100	25	4
512-047-1XT	47	1.005		1
		1.01-1.19	0.01	19
		1.2-1.9	0.1	8
		1-9	1	9
		10-100	10	10
512-046-0XT	46	1.001-1.009	0.001	9
		1.01-1.09	0.01	9
		1.1-1.9	0.1	9
		1-9	1	9
		10-100	10	10
512-032-0XT	32	1.005		1
		1.01-1.09	0.01	9
		1.1-1.9	0.1	9
		1-9	1	9
		10-30	10	3
		50		1

CERAMIC INDIVIDUAL GAUGE BLOCK (<10MM)

SERIES 515

515-700-70

- Made of ceramic
- Meet ISO 3650
- With calibration certificate
- Code explanation

515-□□□-□X
- 0: grade0
- 1: grade1
- decimal
- integer

Supplied below size, unit:mm

0.5	1.01	1.13	1.25	1.37	1.49	5.1
1	1.02	1.14	1.26	1.38	1.5	5.5
1.0005	1.03	1.15	1.27	1.39	1.6	6
1.001	1.04	1.16	1.28	1.4	1.7	6.5
1.002	1.05	1.17	1.29	1.41	1.8	7
1.003	1.06	1.18	1.3	1.42	1.9	7.5
1.004	1.07	1.19	1.31	1.43	2	7.7
1.005	1.08	1.2	1.32	1.44	2.5	8
1.006	1.09	1.21	1.33	1.45	3.5	8.5
1.007	1.1	1.22	1.34	1.46	4	9
1.008	1.11	1.23	1.35	1.47	4.5	9.5
1.009	1.12	1.24	1.36	1.48	5	

Example:

Code	Grade	Size(mm)
515-500-00	0	0.5
515-500-01	1	0.5
515-000-10	0	1
515-0005-11	1	1.0005
515-400-11	1	1.4
515-480-11	1	1.48

CERAMIC INDIVIDUAL GAUGE BLOCK (⩾10MM)

SERIES 516

516-800-01

- Made of ceramic
- Meet ISO 3650
- With calibration certificate
- Code explanation

516-□□□-□X
- 0: grade0
- 1: grade1

Example:

Code	Grade	Size(mm)
516-200-00	0	20
516-200-01	1	20

Code	Size(mm)	Code	Size(mm)	Code	Size(mm)	Code	Size(mm)	Code	Size(mm)
516-100-0X	10	516-140-0X	14	516-185-0X	18.5	516-228-0X	22.8	516-600-0X	60
516-103-0X	10.3	516-145-0X	14.5	516-190-0X	19	516-230-0X	23	516-700-0X	70
516-105-0X	10.5	516-150-0X	15	516-195-0X	19.5	516-235-0X	23.5	516-750-0X	75
516-110-0X	11	516-155-0X	15.5	516-200-0X	20	516-240-0X	24	516-800-0X	80
516-115-0X	11.5	516-160-0X	16	516-202-0X	20.2	516-245-0X	24.5	516-900-0X	90
516-120-0X	12	516-165-0X	16.5	516-205-0X	20.5	516-250-0X	25	516-004-1X	100
516-125-0X	12.5	516-170-0X	17	516-210-0X	21	516-300-0X	30	516-005-1X	125
516-129-0X	12.9	516-175-0X	17.5	516-215-0X	21.5	516-400-0X	40	516-006-1X	150
516-130-0X	13	516-176-0X	17.6	516-220-0X	22	516-413-0X	41.3		
516-135-0X	13.5	516-180-0X	18	516-225-0X	22.5	516-500-0X	50		

SERIES 513

STEEL INDIVIDUAL GAUGE BLOCK(<10MM)

- Made of steel
- Meet ISO 3650
- With calibration certificate
- Code explanation

513-□□□-□X

decimal ← integer

→0: Grade0
→1: Grade1
→2: Grade2

513-700-70

Supplied below size, unit:mm

0.5	0.69	0.88	0.998	1.07	1.26	1.45	2.008	2.19	2.38	4
0.51	0.7	0.89	0.999	1.08	1.27	1.46	2.009	2.2	2.39	4.5
0.52	0.71	0.9	1	1.09	1.28	1.47	2.01	2.21	2.4	5
0.53	0.72	0.91	1.0005	1.1	1.29	1.48	2.02	2.22	2.41	5.1
0.54	0.73	0.92	1.001	1.11	1.3	1.49	2.03	2.23	2.42	5.5
0.55	0.74	0.93	1.002	1.12	1.31	1.5	2.04	2.24	2.43	6
0.56	0.75	0.94	1.003	1.13	1.32	1.6	2.05	2.25	2.44	6.5
0.57	0.76	0.95	1.004	1.14	1.33	1.7	2.06	2.26	2.45	7
0.58	0.77	0.96	1.005	1.15	1.34	1.8	2.07	2.27	2.46	7.5
0.59	0.78	0.97	1.006	1.16	1.35	1.9	2.08	2.28	2.47	7.7
0.6	0.79	0.98	1.007	1.17	1.36	2	2.09	2.29	2.48	8
0.61	0.8	0.99	1.008	1.18	1.37	2.0005	2.1	2.3	2.49	8.5
0.62	0.81	0.991	1.009	1.19	1.38	2.001	2.11	2.31	2.5	9
0.63	0.82	0.992	1.01	1.2	1.39	2.002	2.12	2.32	2.6	9.5
0.64	0.83	0.993	1.02	1.21	1.4	2.003	2.13	2.33	2.7	
0.65	0.84	0.994	1.03	1.22	1.41	2.004	2.14	2.34	2.8	
0.66	0.85	0.995	1.04	1.23	1.42	2.005	2.15	2.35	2.9	
0.67	0.86	0.996	1.05	1.24	1.43	2.006	2.16	2.36	3	
0.68	0.87	0.997	1.06	1.25	1.44	2.007	2.17	2.37	3.5	

Example:

Code	Size(mm)	Grade
513-500-00	0.5	0
513-500-01	0.5	1
513-500-02	0.5	2
513-000-10	1	0
513-0005-11	1.0005	1
513-400-12	1.4	2
513-480-11	1.48	1

SERIES 514

STEEL INDIVIDUAL GAUGE BLOCK (⩾10MM)

- Made of steel
- Meet ISO 3650
- With calibration certificate
- Code explanation

514-□□□-□X

→0: Grade0
→1: Grade1
→2: Grade2

514-004-1X

Code	Size(mm)
514-100-0X	10
514-103-0X	10.3
514-105-0X	10.5
514-110-0X	11
514-115-0X	11.5
514-120-0X	12
514-125-0X	12.5
514-129-0X	12.9
514-130-0X	13
514-135-0X	13.5
514-140-0X	14
514-145-0X	14.5
514-150-0X	15

Code	Size(mm)
514-155-0X	15.5
514-160-0X	16
514-165-0X	16.5
514-170-0X	17
514-175-0X	17.5
514-176-0X	17.6
514-180-0X	18
514-185-0X	18.5
514-190-0X	19
514-195-0X	19.5
514-200-0X	20
514-202-0X	20.2
514-205-0X	20.5

Code	Size(mm)
514-210-0X	21
514-215-0X	21.5
514-220-0X	22
514-225-0X	22.5
514-228-0X	22.8
514-230-0X	23
514-235-0X	23.5
514-240-0X	24
514-245-0X	24.5
514-250-0X	25
514-300-0X	30
514-350-0X	35
514-400-0X	40

Code	Size(mm)
514-413-0X	41.3
514-450-0X	45
514-500-0X	50
514-600-0X	60
514-700-0X	70
514-750-0X	75
514-800-0X	80
514-900-0X	90
514-004-1X	100
514-005-1X	125
514-006-1X	150
514-007-1X	175
514-008-1X	200

Code	Size(mm)
514-010-1X	250
514-012-1X	300
514-016-1X	400
514-020-1X	500
514-024-1X	600
514-028-1X	700
514-030-1X	750
514-032-1X	800
514-036-1X	900
514-040-1X	1000

GAUGE BLOCK SET FOR CALIPER INSPECTION

SERIES 517

517-005-01

- For checking calipers accuracy
- With ring gauges
- Meet ISO 3650
- Gauge blocks are made of alloy steel
- With inspection certificate

Code	Guage block allocation	Quantity	Grade	Ring gauge
517-005-01	30, 41.3, 131.4mm	5pcs	1	Ø4,Ø25mm
517-006-01	30, 41.3, 131.4, 243.5mm	5pcs	1	Ø4,Ø25mm

GAUGE BLOCK SET FOR CALIPER INSPECTION

SERIES 517

517-012-01

- For checking calipers accuracy
- Meet ISO 3650
- Gauge blocks are made of alloy steel
- With inspection certificate

Code	Guage block allocation	Quantity	Grade
517-012-01	10, 20, 20, 41.2, 51.2, 81.5, 101.2, 121.5, 121.8, 191.8, 201.5, 291.8mm	12pcs	0
517-012-02	10, 20, 20, 41.2, 51.2, 81.5, 101.2, 121.5, 121.8, 191.8, 201.5, 291.8mm	12pcs	1
517-012-03	10, 20, 20, 41.2, 51.2, 81.5, 101.2, 121.5, 121.8, 191.8, 201.5, 291.8mm	12pcs	2

SERIES 518 GAUGE BLOCK SET FOR MICROMETER INSPECTION

- For checking micrometers accuracy
- With optical parallel
- Grade 0
- Meet ISO 3650
- With inspection certificate

518-001-03

(mm)

Code	For micrometers	Quantity	Material	Block allocation
518-001-02	0-25	11pcs	ceramic	2.5, 5.1, 7.7, 10.3, 12,9, 15, 17.6, 20.2, 22.8, 25
518-001-03	0-25	11pcs	alloy steel	2.5, 5.1, 7.7, 10.3, 12,9, 15, 17.6, 20.2, 22.8, 25

SERIES 518 GAUGE BLOCK SET FOR MICROMETER INSPECTION

- For checking micrometers accuracy
- Grade 0
- Meet ISO 3650
- With inspection certificate

518-001-01

(mm)

Code	For micrometers	Quantity	Material	Block allocation
518-001-01	0-25	10pcs	alloy steel	2.5, 5.1, 7.7, 10.3, 12,9, 15, 17.6, 20.2, 22.8, 25
518-002-01	25-50	11pcs	alloy steel	25, 27.5, 30.1, 32.7, 35.3, 37.9, 40, 42.6, 45.2, 47.8, 50
518-003-01	50-75	11pcs	alloy steel	50, 52.5, 55.1, 57.7, 60.3, 62.9, 65, 67.6, 70.2, 72.8, 75
518-004-01	75-100	11pcs	alloy steel	75, 77.5, 80.1, 82.7, 85.3, 87.9, 90, 92.6, 95.2, 97.8, 100

GAUGE BLOCK ACCESSORIES

SERIES 520

520-004-11

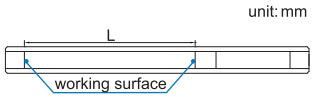

Code	Name	Clamping range (L)
520-002-11	holder	0-50mm
520-004-11	holder	50-100mm
520-008-11	holder	100-200mm
520-012-11	holder	200-300mm
520-016-11	holder	300-400mm
520-020-11	holder	400-500mm

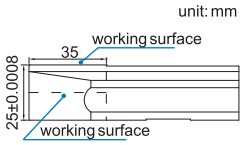

Code	Name
520-100-11	base

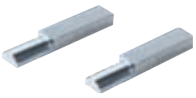

supplied a pair

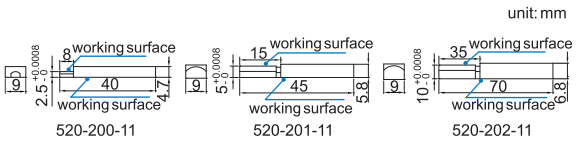

Code	Name	Size	Material
520-200-11	half round jaw	2mm	carbide
520-201-11	half round jaw	5mm	carbide
520-202-11	half round jaw	10mm	carbide

supplied a pair

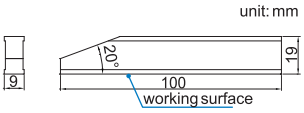

Code	Name	Material
520-300-11	plain jaw	carbide

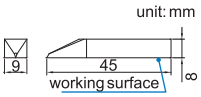

Code	Name	Material
520-400-11	scriber	carbide

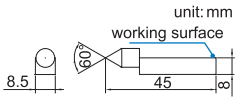

Code	Name	Tip Material
520-500-11	center point	carbide

Application

(plain jaw+holder)
set zero

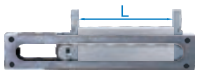

(half round jaw+holder) set a standard inside length L

(half round jaw+holder)
measure inside diameter

(base+holder+scriber)
measure height or scribe

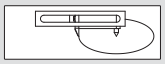

(scriber+centre point+holder)
scribe circle

SERIES 519 GAUGE BLOCK ACCESSORY

- To expand gage block applications

Code	Total quantity	Accessory allocation
519-016-01	17pcs	3pcs holder (50mm, 100mm, 200mm) 6pcs half round jaw (2mm, 5mm, 10mm, 2pcs each) 1pc holder base, 2pcs 100mm plain jaws, 1pc scriber point, 1pc center point, 2pcs triangular straight edge jaw 60mm 1pc 100mm straight edge

SERIES 571 ANGLE GAUGE BLOCK SET

- For angle comparison
- One angle can be as used in triangle blocks four angles can be as used in rectangle blocks

571-007-01

Code	Blocks per set	Accuracy	Sharp	Angle
571-007-01	7	±10"	triangle	15°10', 30°20' ,45°30', 50°,60°40' ,75°50' ,90°
571-036-01	36	±10"	triangle	10°, 11°, 12°, 13°, 14°, 15°, 16°, 17°,18° , 19°, 20°
				30° , 40°, 45°, 50°, 60°, 70°
				15°1',15°2' , 15°3', 15°4',15°5' ,15°6' ,15°7' ,15°8' ,15°9'
				15°10', 15°20', 15°30', 15°40', 15°50',10°00'30"
			rectangle	80°/81°/100°/ 99°
				89°10'/89°20'/90°50'/ 90°40'
				89°30'/ 89°40'/90°30'/90°20'
				90°/90°/90°/90°

CHECK MASTER SERIES 561

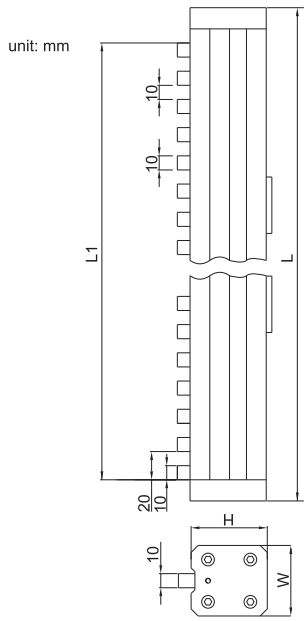

561-024-01

- For checking the accuracy of measuring tools like calipers, height gage and so on
- Can be used in vertical and horizontal orientation
- Supplied with inspection certificate

Code	Range	Parallelism of blocks	Accuracy	W	H	L1	L
561-012-01	300mm	1.2μm	±2.5μm	45	49	310	350
561-018-01	450mm	1.5μm	±3.5μm	50	54	470	510
561-024-01	600mm	1.5μm	±3.5μm	50	54	610	650

PIN GAUGE SERIES 522

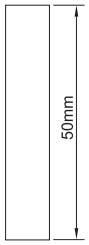

522-06933-2

- Supplied diameter from 0.10 to 40mm, above 40mm are available upon request
- Accuracy:
  ±1μm (range:0.1-13mm)
  ±2μm (range:13-40mm)
- Made of alloy steel
- Hardness HRC62-65
- Code explanation:

522-□□□□□-2

diameter

Example:

Code	Size(mm)	Accuracy
522-00125-2	0.125	±1μm
522-09125-2	9.125	±1μm
522-19125-2	19.125	±2μm

SERIES 523 PIN GAUGE SET

- Made of alloy steel
- Hardness HRC62-65
- Accuracy:
  ±1μm (range:0.1-13mm)
  ±2μm (range:13-40mm)

523-650-51

Code	Diameter(mm)	Step	Quantity
523-010-41	0.10-0.50	0.01mm	41
523-020-31	0.20-0.50	0.01mm	31
523-050-51	0.50-1.00	0.01mm	51
523-100-51	1.00-1.50	0.01mm	51
523-150-51	1.50-2.00	0.01mm	51
523-200-51	2.00-2.50	0.01mm	51
523-250-51	2.50-3.00	0.01mm	51
523-300-51	3.00-3.50	0.01mm	51
523-350-51	3.50-4.00	0.01mm	51
523-400-51	4.00-4.50	0.01mm	51
523-450-51	4.50-5.00	0.01mm	51
523-500-01	5.00-5.50	0.01mm	51
523-550-51	5.50-6.00	0.01mm	51
523-600-51	6.00-6.50	0.01mm	51
523-650-51	6.50-7.00	0.01mm	51

Code	Diameter(mm)	Step	Quantity
523-700-51	7.00-7.50	0.01mm	51
523-750-51	7.50-8.00	0.01mm	51
523-800-51	8.00-8.50	0.01mm	51
523-850-51	8.50-9.00	0.01mm	51
523-900-51	9.00-9.50	0.01mm	51
523-950-51	9.50-10.00	0.01mm	51
523-500-41	1.0-5.0	0.1mm	41
523-500-51	5.0-10.0	0.1mm	51
523-1000-51	10.00-10.50	0.01mm	51
523-1050-51	10.50-11.00	0.01mm	51
523-1100-51	11.00-11.50	0.01mm	51
523-1150-51	11.50-12.00	0.01mm	51
523-1200-51	12.00-12.50	0.01mm	51
523-1250-51	12.50-13.00	0.01mm	51
523-1300-51	13.00-13.50	0.01mm	51

Code	Diameter(mm)	Step	Quantity
523-1350-51	13.50-14.00	0.01mm	51
523-1400-51	14.00-14.50	0.01mm	51
523-1450-51	14.50-15.00	0.01mm	51
523-1500-51	15.00-15.50	0.01mm	51
523-1550-51	15.50-16.00	0.01mm	51
523-1600-51	16.00-16.50	0.01mm	51
523-1650-51	16.50-17.00	0.01mm	51
523-1700-51	17.00-17.50	0.01mm	51
523-1750-51	17.50-18.00	0.01mm	51
523-1800-51	18.00-18.50	0.01mm	51
523-1850-51	18.50-19.00	0.01mm	51
523-1900-51	19.00-19.50	0.01mm	51
523-1950-51	19.50-20.00	0.01mm	51
523-1000-01	10.0-15.0mm	0.1mm	51
523-1500-01	15.0-20.0mm	0.1mm	51

SERIES 524 BOX FOR PIN GAUGE SET

- For containing pin gauges

524-001-01

Code	Gauge range	Max. packed QTY
524-001-01	0.10-10mm	51
524-001-02	10-13mm	72
524-001-03	13-20mm	50
524-001-04	20-34mm	32

STEEL BALL SET 526

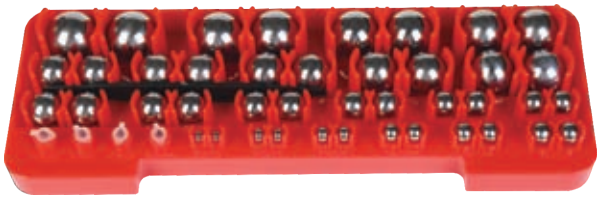

- To measure diameter and angle of taper holes
- Each size has a pair of steel ball
- Material: tool steel
- Hardness: HRC63
- Diameter accuracy: ±2μm
- Roundness: 0.6μm

Calculate angle (α) and diameter (Dmax) according to the ball diameter (D, d), height (A) and depth(B)

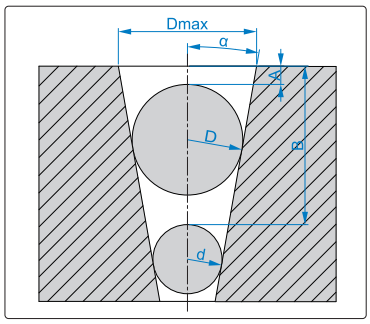

Code	Steel balls per set	diameter(mm)
526-025-01	25 pairs	1, 2, 3, 4, 5, 6, 7, 8, 9, 10, 11, 12, 13, 14, 15, 16, 17, 18, 19, 20, 21, 22, 23, 24, 25

MASTER SETTING DISC SERIES 525

525-020-01

- Hardness: HRC60-62
- Conforms to standard ASME B89.1.5

Diameter	Supplied difference	Roundness and conicity
3-21mm	±0.8μm	0.5μm
21-30mm	±0.8μm	0.7μm
30-40mm	±1.1μm	0.7μm
40-65mm	±1.5μm	1.0μm
65-110mm	±1.9μm	1.2μm
110-120mm	±1.9μm	1.6μm
120-130mm	±2.4μm	1.6μm

other sizes are available upon request

Code	Size(mm)	Code	Size(mm)	Code	Size(mm)	Code	Size(mm)	Code	Size(mm)
525-003-01	Ø3	525-016-01	Ø16	525-029-01	Ø29	525-042-01	Ø42	525-075-01	Ø75
525-004-01	Ø4	525-017-01	Ø17	525-030-01	Ø30	525-043-01	Ø43	525-080-01	Ø80
525-005-01	Ø5	525-018-01	Ø18	525-031-01	Ø31	525-044-01	Ø44	525-085-01	Ø85
525-006-01	Ø6	525-019-01	Ø19	525-032-01	Ø32	525-045-01	Ø45	525-090-01	Ø90
525-007-01	Ø7	525-020-01	Ø20	525-033-01	Ø33	525-046-01	Ø46	525-095-01	Ø95
525-008-01	Ø8	525-021-01	Ø21	525-034-01	Ø34	525-047-01	Ø47	525-100-01	Ø100
525-009-01	Ø9	525-022-01	Ø22	525-035-01	Ø35	525-048-01	Ø48	525-105-01	Ø105
525-010-01	Ø10	525-023-01	Ø23	525-036-01	Ø36	525-049-01	Ø49	525-110-01	Ø110
525-011-01	Ø11	525-024-01	Ø24	525-037-01	Ø37	525-050-01	Ø50	525-115-01	Ø115
525-012-01	Ø12	525-025-01	Ø25	525-038-01	Ø38	525-055-01	Ø55	525-120-01	Ø120
525-013-01	Ø13	525-026-01	Ø26	525-039-01	Ø39	525-060-01	Ø60	525-125-01	Ø125
525-014-01	Ø14	525-027-01	Ø27	525-040-01	Ø40	525-065-01	Ø65	525-130-01	Ø130
525-015-01	Ø15	525-028-01	Ø28	525-041-01	Ø41	525-070-01	Ø70		

SERIES 529 THREE WIRE MEASURING UNITS

- Made of alloy steel
- One unit includes 3pcs same size
- Hardness HRC60-62
- Accuracy:
  ±0.25μm (grade 0), ±0.5μm (grade 1)
- Roundness:
  0.25μm (grade 0), 0.5μm (grade 1)
- Code explanation

529-□□□□-0X
- 0: grade0
- 1: grade1

Example:

Code	Size(mm)	Grade
529-2886-00	2.886	0
529-2886-01	2.886	1

Supplied all 55 size as a set

Code	Quantity	Grade
529-055-00	55×3pcs	0
529-055-01	55×3pcs	1

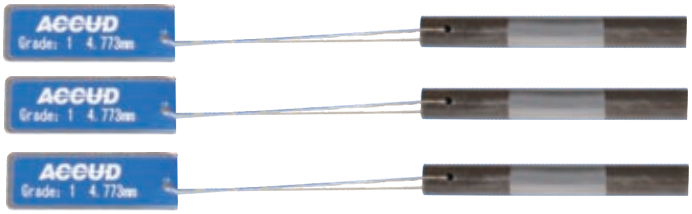

529-4773-01

d≤0. 572mm

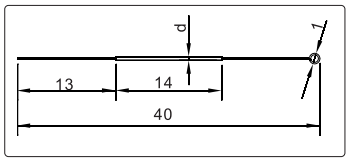

0. 572mm<d<1. 591mm

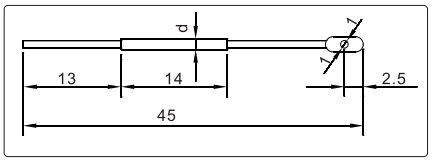

d≥1. 591mm

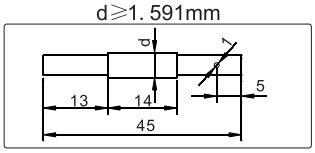

Supplied 55 different size, unit:mm

0.118	0.260	0.572	1.302	2.020	2.886	3.580	4.773
0.142	0.291	0.724	1.441	2.050	3.106	3.666	5.150
0.170	0.343	0.796	1.553	2.071	3.177	4.091	5.176
0.185	0.402	0.866	1.591	2.217	3.287	4.120	5.493
0.201	0.433	1.008	1.732	2.311	3.310	4.141	6.212
0.232	0.461	1.047	1.833	2.595	3.468	4.211	6.585
0.250	0.511	1.157	1.883	2.866	3.550	4.400	

SERIES 531 SETTING RING

- For inside micrometer and bore gage setting
- Deviation (difference between the order size and the size marked on supplied setting ring)
  Ø3-100: ±3.0μm Ø100-300: ±5.0μm
- Accuracy: Ø3-100: ±1.0μm
  Ø100-250: ±2.0μm Ø250-300: ±2.5μm
- Range: Ø3-300mm
- Other sizes are available upon request

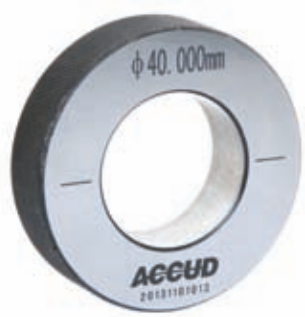

531-040-01

Code	Size(mm)	Code	Size(mm)	Code	Size(mm)	Code	Size(mm)	Code	Size(mm)
531-003-01	Ø3	531-017-01	Ø17	531-031-01	Ø31	531-045-01	Ø45	531-087-01	Ø87
531-004-01	Ø4	531-018-01	Ø18	531-032-01	Ø32	531-046-01	Ø46	531-090-01	Ø90
531-005-01	Ø5	531-019-01	Ø19	531-033-01	Ø33	531-047-01	Ø47	531-095-01	Ø95
531-006-01	Ø6	531-020-01	Ø20	531-034-01	Ø34	531-048-01	Ø48	531-100-01	Ø100
531-007-01	Ø7	531-021-01	Ø21	531-035-01	Ø35	531-049-01	Ø49	531-125-01	Ø125
531-008-01	Ø8	531-022-01	Ø22	531-036-01	Ø36	531-050-01	Ø50	531-150-01	Ø150
531-009-01	Ø9	531-023-01	Ø23	531-037-01	Ø37	531-055-01	Ø55	531-175-01	Ø175
531-010-01	Ø10	531-024-01	Ø24	531-038-01	Ø38	531-060-01	Ø60	531-200-01	Ø200
531-011-01	Ø11	531-025-01	Ø25	531-039-01	Ø39	531-062-01	Ø62	531-225-01	Ø225
531-012-01	Ø12	531-026-01	Ø26	531-040-01	Ø40	531-065-01	Ø65	531-250-01	Ø250
531-013-01	Ø13	531-027-01	Ø27	531-041-01	Ø41	531-070-01	Ø70	531-275-01	Ø275
531-014-01	Ø14	531-028-01	Ø28	531-042-01	Ø42	531-075-01	Ø75	531-300-01	Ø300
531-015-01	Ø15	531-029-01	Ø29	531-043-01	Ø43	531-080-01	Ø80		
531-016-01	Ø16	531-030-01	Ø30	531-044-01	Ø44	531-085-01	Ø85		

PLAIN PLUG GAUGE SERIES 541

541-010-17

- Grade H7
- Hardness HRC 60±2
- Confirms to standard GB/T 1957-2006
- Supplied range from 1mm to 100mm, step: 1mm, other sizes or grade are available upon request

Type A

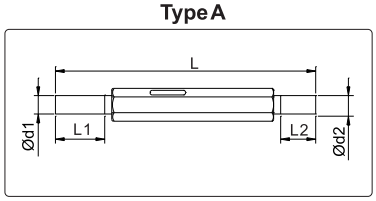

Type B

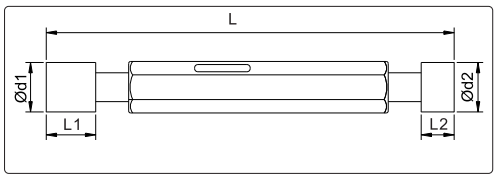

Type C

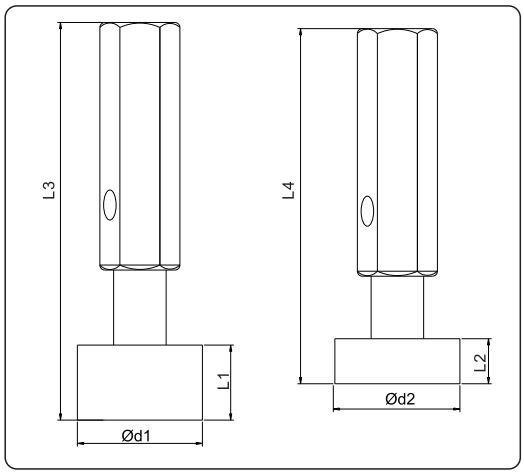

Diameter Ød (mm)	Ød1 size tolerance of Go gage (mm)	Ød2 size tolerance of Go gage (mm)	L1	L2	L	L3	L4
≥2 ≤3	+0.0010, +0.0022	+0.0088, +0.010	6.5	4.5	62		
>3 ≤6	+0.0013, +0.0027	+0.0106, +0.012	8	6	74		
>6, ≤10	+0.0015, +0.0033	+0.0132, +0.015	10	7	87		
>10, ≤14	+0.0018, +0.0038	+0.0160, +0.018	12	8	99		
>14, ≤18	+0.0018, +0.0038	+0.0160, +0.018	14	10	114		
>18, ≤24	+0.0023, +0.0046	+0.0186, +0.021	16	12	132		
>24, ≤30	+0.0023, +0.0046	+0.0186, +0.021	18	14	136		
>30, ≤40	+0.0023, +0.0055	+0.0220, +0.025	20	15	155		
>40, ≤50	+0.0023, +0.0055	+0.0220, +0.025	25	18	169		
>50, ≤65	+0.0028, +0.0064	+0.0264, +0.030	30	18		164	165
>65, ≤80	+0.0028, +0.0064	+0.0264, +0.030	35	25		169	159
>80, ≤100	+0.0032, +0.0075	+0.0308, +0.035	35	25		169	159

Code	Diameter Ød (mm)	Type	Code	Diameter Ød (mm)	Type	Code	Diameter Ød (mm)	Type	Code	Diameter Ød (mm)	Type
541-002-17	2	A	541-017-17	17	B	541-032-17	32	B	541-047-17	47	B
541-003-17	3	A	541-018-17	18	B	541-033-17	33	B	541-048-17	48	B
541-004-17	4	A	541-019-17	19	B	541-034-17	34	B	541-049-17	49	B
541-005-17	5	A	541-020-17	20	B	541-035-17	35	B	541-050-17	50	B
541-006-17	6	A	541-021-17	21	B	541-036-17	36	B	541-052-17	52	C
541-007-17	7	A	541-022-17	22	B	541-037-17	37	B	541-055-17	55	C
541-008-17	8	A	541-023-17	23	B	541-038-17	38	B	541-060-17	60	C
541-009-17	9	B	541-024-17	24	B	541-039-17	39	B	541-065-17	65	C
541-010-17	10	B	541-025-17	25	B	541-040-17	40	B	541-070-17	70	C
541-011-17	11	B	541-026-17	26	B	541-041-17	41	B	541-075-17	75	C
541-012-17	12	B	541-027-17	27	B	541-042-17	42	B	541-080-17	80	C
541-013-17	13	B	541-028-17	28	B	541-043-17	43	B	541-085-17	85	C
541-014-17	14	B	541-029-17	29	B	541-044-17	44	B	541-090-17	90	C
541-015-17	15	B	541-030-17	30	B	541-045-17	45	B	541-095-17	95	C
541-016-17	16	B	541-031-17	31	B	541-046-17	46	B	541-100-17	100	C

532/533/534/535 THREAD RING GAUGE

- Grade 6g
- Meet ISO1502
- Hardness HRC60-62
- Other sizes are available upon request

532-020-01

533-020-01

STANDARD THREAD

Code(GO)	Code(NOGO)	Size(mm)
532-002-01	533-002-01	M2x0.4
532-002-21	533-002-21	M2.2x0.45
532-002-51	533-002-51	M2.5x0.45
532-003-01	533-003-01	M3x0.5
532-003-51	533-003-51	M3.5x0.6
532-004-01	533-004-01	M4x0.7
532-005-01	533-005-01	M5x0.8
532-006-01	533-006-01	M6x1
532-008-01	533-008-01	M8x1.25

Code(GO)	Code(NOGO)	Size(mm)
532-010-01	533-010-01	M10x1.5
532-012-01	533-012-01	M12x1.75
532-014-01	533-014-01	M14x2
532-016-01	533-016-01	M16x2
532-018-01	533-018-01	M18x2.5
532-020-01	533-020-01	M20x2.5
532-022-01	533-022-01	M22x2.5
532-024-01	533-024-01	M24x3
532-027-01	533-027-01	M27x3

Code(GO)	Code(NOGO)	Size(mm)
532-030-01	533-030-01	M30x3.5
532-033-01	533-033-01	M33x3.5
532-036-01	533-036-01	M36x4
532-042-01	533-042-01	M42x4.5
532-048-01	533-048-01	M48x5
532-052-01	533-052-01	M52x5
532-060-01	533-060-01	M60x5.5

FINE THREAD

Code(GO)	Code(NOGO)	Size(mm)
534-002-01	535-002-01	M2x0.25
534-002-21	535-002-21	M2.2x0.25
534-002-51	535-002-51	M2.5x0.35
534-003-01	535-003-01	M3x0.35
534-003-51	535-003-51	M3.5x0.35
534-004-01	535-004-01	M4x0.5
534-005-01	535-005-01	M5x0.5
534-006-01	535-006-01	M6x0.5
534-006-02	535-006-02	M6x0.75
534-007-01	535-007-01	M7x0.5
534-007-02	535-007-02	M7x0.75
534-008-01	535-008-01	M8x0.5
534-008-02	535-008-02	M8x0.75
534-008-03	535-008-03	M8x1
534-009-01	535-009-01	M9x0.5
534-009-02	535-009-02	M9x0.75
534-009-03	535-009-03	M9x1
534-010-01	535-010-01	M10x0.5
534-010-02	535-010-02	M10x0.75
534-010-03	535-010-03	M10x1
534-010-04	535-010-04	M10x1.25
534-011-02	535-011-02	M11x0.75
534-011-03	535-011-03	M11x1
534-012-01	535-012-01	M12x0.5
534-012-02	535-012-02	M12x0.75
534-012-03	535-012-03	M12x1
534-012-04	535-012-04	M12x1.25
534-012-05	535-012-05	M12x1.5
534-014-01	535-014-01	M14x0.5
534-014-02	535-014-02	M14x0.75
534-014-03	535-014-03	M14x1
534-014-04	535-014-04	M14x1.25
534-014-05	535-014-05	M14x1.5
534-016-01	535-016-01	M16x0.5
534-016-02	535-016-02	M16x0.75
534-016-03	535-016-03	M16x1
534-016-04	535-016-04	M16x1.5

Code(GO)	Code(NOGO)	Size(mm)
534-018-01	535-018-01	M18x0.5
534-018-02	535-018-02	M18x0.75
534-018-03	535-018-03	M18x1
534-018-04	535-018-04	M18x1.5
534-018-05	535-018-05	M18x2
534-020-01	535-020-01	M20x0.5
534-020-02	535-020-02	M20x0.75
534-020-03	535-020-03	M20x1
534-020-04	535-020-04	M20x1.5
534-020-05	535-020-05	M20x2
534-022-01	535-022-01	M22x0.5
534-022-02	535-022-02	M22x0.75
534-022-03	535-022-03	M22x1
534-022-04	535-022-04	M22x1.5
534-022-05	535-022-05	M22x2
534-024-01	535-024-01	M24x0.75
534-024-02	535-024-02	M24x1
534-024-03	535-024-03	M24x1.5
534-024-04	535-024-04	M24x2
534-027-01	535-027-01	M27x0.75
534-027-02	535-027-02	M27x1
534-027-03	535-027-03	M27x1.5
534-027-04	535-027-04	M27x2
534-030-01	535-030-01	M30x0.75
534-030-02	535-030-02	M30x1
534-030-03	535-030-03	M30x1.5
534-030-04	535-030-04	M30x2
534-030-05	535-030-05	M30x3
534-033-01	535-033-01	M33x0.75
534-033-02	535-033-02	M33x1
534-033-03	535-033-03	M33x1.5
534-033-04	535-033-04	M33x2
534-033-05	535-033-05	M33x3
534-036-01	535-036-01	M36x1
534-036-02	535-036-02	M36x1.5
534-036-03	535-036-03	M36x2
534-036-04	535-036-04	M36x3

Code (GO)	Code (NOGO)	Size(mm)
534-039-01	535-039-01	M39x1
534-039-02	535-039-02	M39x1.5
534-039-03	535-039-03	M39x2
534-039-04	535-039-04	M39x3
534-042-01	535-042-01	M42x1
534-042-02	535-042-02	M42x1.5
534-042-03	535-042-03	M42x2
534-042-04	535-042-04	M42x3
534-042-05	535-042-05	M42x4
534-045-01	535-045-01	M45x1
534-045-02	535-045-02	M45x1.5
534-045-03	535-045-03	M45x2
534-045-04	535-045-04	M45x3
534-045-05	535-045-05	M45x4
534-048-01	535-048-01	M48x1
534-048-02	535-048-02	M48x1.5
534-048-03	535-048-03	M48x2
534-048-04	535-048-04	M48x3
534-048-05	535-048-05	M48x4
534-052-01	535-052-01	M52x1
534-052-02	535-052-02	M52x1.5
534-052-03	535-052-03	M52x2
534-052-04	535-052-04	M52x3
534-052-05	535-052-05	M52x4
534-056-01	535-056-01	M56x1
534-056-02	535-056-02	M56x1.5
534-056-03	535-056-03	M56x2
534-056-04	535-056-04	M56x3
534-056-05	535-056-05	M56x4
534-060-01	535-060-01	M60x1
534-060-02	535-060-02	M60x1.5
534-060-03	535-060-03	M60x2
534-060-04	535-060-04	M60x3
534-060-05	535-060-05	M60x4

THREAD PLUG GAUGE SERIES 542

542-010-01

- Grade 6H
- Meet ISO1502
- Hardness HRC60-62
- Other sizes are available upon request

Code	Size(mm)	Code	Size(mm)	Code	Size(mm)	Code	Size(mm)
542-002-01	M2x0.4	542-007-01	M7x1	542-018-01	M18x2.5	542-039-01	M39x4
542-002-21	M2.2x0.45	542-008-01	M8x1.25	542-020-01	M20x2.5	542-042-01	M42x4.5
542-002-51	M2.5x0.45	542-009-01	M9x1.25	542-022-01	M22x2.5	542-045-01	M45x4.5
542-003-01	M3x0.5	542-010-01	M10x1.5	542-024-01	M24x3	542-048-01	M48x5
542-003-02	M3.5x0.6	542-011-01	M11x1.5	542-027-01	M27x3	542-052-01	M52x5
542-004-01	M4x0.7	542-012-01	M12x1.75	542-030-01	M30x3.5	542-056-01	M56x5.5
542-005-01	M5x0.8	542-014-01	M14x2	542-033-01	M33x3.5	542-060-01	M60x5.5
542-006-01	M6x1	542-016-01	M16x2	542-036-01	M36x4		

FINE THREAD PLUG GAUGE SERIES 543

543-020-01

- Grade 6H
- Meet ISO1502
- Hardness HRC60-62 , good wear resistance
- Other sizes are available upon request

Code	Size(mm)	Code	Size(mm)	Code	Size(mm)	Code	Size(mm)	Code	Size(mm)
543-002-01	M2x0.25	543-011-02	M11x0.75	543-020-02	M20x0.75	543-033-01	M33x0.75	543-045-05	M45x4
543-002-21	M2.2x0.25	543-011-03	M11x1	543-020-03	M20x1	543-033-02	M33x1	543-048-01	M48x1
543-002-31	M2.5x0.35	543-012-01	M12x0.5	543-020-04	M20x1.5	543-033-03	M33x1.5	543-048-02	M48x1.5
543-003-01	M3x0.35	543-012-02	M12x0.75	543-020-05	M20x2	543-033-04	M33x2	543-048-03	M48x2
543-003-02	M3.5x0.35	543-012-03	M12x1	543-022-01	M22x0.5	543-033-05	M33x3	543-048-04	M48x3
543-004-01	M4x0.5	543-012-04	M12x1.25	543-022-02	M22x0.75	543-036-01	M36x1	543-048-05	M48x4
543-005-01	M5x0.5	543-012-05	M12x1.5	543-022-03	M22x1	543-036-02	M36x1.5	543-052-01	M52x1
543-006-01	M6x0.5	543-014-01	M14x0.5	543-022-04	M22x1.5	543-036-03	M36x2	543-052-02	M52x1.5
543-006-02	M6x0.75	543-014-02	M14x0.75	543-022-05	M22x2	543-036-04	M36x3	543-052-03	M52x2
543-007-01	M7x0.5	543-014-03	M14x1	543-024-01	M24x0.75	543-039-01	M39x1	543-052-04	M52x3
543-007-02	M7x0.75	543-014-04	M14x1.25	543-024-02	M24x1	543-039-02	M39x1.5	543-052-05	M52x4
543-008-01	M8x0.5	543-014-05	M14x1.5	543-024-03	M24x1.5	543-039-03	M39x2	543-056-01	M56x1
543-008-02	M8x0.75	543-016-01	M16x0.5	543-024-04	M24x2	543-039-04	M39x3	543-056-02	M56x1.5
543-008-03	M8x1	543-016-02	M16x0.75	543-027-01	M27x0.75	543-042-01	M42x1	543-056-03	M56x2
543-009-01	M9x0.5	543-016-03	M16x1	543-027-02	M27x1	543-042-02	M42x1.5	543-056-04	M56x3
543-009-02	M9x0.75	543-016-04	M16x1.5	543-027-03	M27x1.5	543-042-03	M42x2	543-056-05	M56x4
543-009-03	M9x1	543-018-01	M18x0.5	543-027-04	M27x2	543-042-04	M42x3	543-060-01	M60x1
543-010-01	M10x0.5	543-018-02	M18x0.75	543-030-01	M30x0.75	543-042-05	M42x4	543-060-02	M60x1.5
543-010-02	M10x0.75	543-018-03	M18x1	543-030-02	M30x1	543-045-01	M45x1	543-060-03	M60x2
543-010-03	M10x1	543-018-04	M18x1.5	543-030-03	M30x1.5	543-045-02	M45x1.5	543-060-04	M60x3
543-010-04	M10x1.25	543-018-05	M18x2	543-030-04	M30x2	543-045-03	M45x2	543-060-05	M60x4
543-011-01	M11x0.5	543-020-01	M20x0.5	543-030-05	M30x3	543-045-04	M45x3		

SERIES 537/538 AMERICAN STANDARD THREAD RING GAUGE

- Class 2A
- Conforms to standard ANSI B1.2
- Made of Oil Hardened Non-shringking steel
- Hardness HRC60-62

537-71620-UNF

Code(GO)	Code(NOGO)	Size
537-00440-UNC	538-00440-UNC	4-40UNC
537-04048-UNF	538-04048-UNF	4-48UNF
537-00632-UNC	538-00632-UNC	6-32UNC
537-06040-UNF	538-06040-UNF	6-40UNF
537-00832-UNC	538-00832-UNC	8-32UNC
537-08036-UNF	538-08036-UNF	8-36UNF
537-01024-UNC	538-01024-UNC	10-24UNC
537-01032-UNF	538-01032-UNF	10-32UNF
537-01420-UNC	538-01420-UNC	1/4-20UNC
537-01428-UNF	538-01428-UNF	1/4-28UNF

Code(GO)	Code(NOGO)	Size
537-51618-UNC	538-51618-UNC	5/16-18UNC
537-51624-UNF	538-51624-UNF	5/16-24UNF
537-03816-UNC	538-03816-UNC	3/8-16UNC
537-03824-UNF	538-03824-UNF	3/8-24UNF
537-71614-UNC	538-71614-UNC	7/16-14UNC
537-71620-UNF	538-71620-UNF	7/16-20 UNF
537-01213-UNC	538-01213-UNC	1/2-13 UNC
537-01220-UNF	538-01220-UNF	1/2-20 UNF
537-91612-UNC	538-91612-UNC	9/16-12UNC
537-91618-UNF	538-91618-UNF	9/16-18UNF

Code(GO)	Code(NOGO)	Size
537-05811-UNC	538-05811-UNC	5/8-11UNC
537-05818-UNF	538-05818-UNF	5/8-18UNF
537-03410-UNC	538-03410-UNC	3/4-10UNC
537-03416-UNF	538-03416-UNF	3/4-16UNF
537-07809-UNC	538-07809-UNC	7/8-9UNC
537-07814-UNF	538-07814-UNF	7/8-14UNF
537-01080-UNC	538-01080-UNC	1-8 UNC
537-01012-UNF	538-01012-UNF	1-12UNF

SERIES 547 AMERICAN STANDARD THREAD PLUG GAUGE

- Class 2B
- Conforms to standard ANSI B1.2
- Made of Oil Hardened Non-shringking steel
- Hardness HRC60-62

547-71620-UNF

Code(GO)	Size
547-00440-UNC	4-40UNC
547-04048-UNF	4-48UNF
547-00632-UNC	6-32UNC
547-06040-UNF	6-40UNF
547-00832-UNC	8-32UNC
547-08036-UNF	8-36UNF
547-01024-UNC	10-24UNC
547-01032-UNF	10-32UNF
547-01420-UNC	1/4-20UNC
547-01428-UNF	1/4-28UNF

Code(GO)	Size
547-51618-UNC	5/16-18UNC
547-51624-UNF	5/16-24UNF
547-03816-UNC	3/8-16UNC
547-03824-UNF	3/8-24UNF
547-71614-UNC	7/16-14UNC
547-71620-UNF	7/16-20 UNF
547-01213-UNC	1/2-13 UNC
547-01220-UNF	1/2-20 UNF
547-91612-UNC	9/16-12UNC
547-91618-UNF	9/16-18UNF

Code(GO)	Size
547-05811-UNC	5/8-11UNC
547-05818-UNF	5/8-18UNF
547-03410-UNC	3/4-10UNC
547-03416-UNF	3/4-16UNF
547-07809-UNC	7/8-9UNC
547-07814-UNF	7/8-14UNF
547-01080-UNC	1-8 UNC
547-01012-UNF	1-12UNF

NPT THREAD GAUGE

SERIES 544

RING GAUGE

Back 544-014-01R Front

- Conforms to standard ANSI/ASME B1.20.1
- Taper: 1:16
- Made of Oil Hardened Non-shringking steel

Code	Size	Code	Size
544-027-04R	NPT 1/16" x 27	**544-11D5-12R**	NPT1-1/4"x11.5
544-027-03R	NPT 1/8" x 27	**544-11D5-11R**	NPT1-1/2"x11.5
544-018-02R	NPT1/4" x 18	**544-11D5-20R**	NPT2"X11.5
544-018-33R	NPT3/8"x18	**544-008-21R**	NPT2-1/2"X8
544-014-01R	NPT1/2" x 14	**544-008-30R**	NPT3"X8
544-014-32R	NPT3/4"x14	**544-008-32R**	NPT3-1/2"X8
544-11D5-10R	NPT1"x11.5	**544-008-40R**	NPT4"X8

PLUG GAUGE

- Conforms to standard ANSI/ASME B1.20.1
- Taper: 1:16
- Made of Oil Hardened Non-shringking steel

544-014-01

Code	Size	Code	Size
544-027-04	NPT 1/16" x 27	**544-11D5-12**	NPT1-1/4"x11.5
544-027-03	NPT 1/8" x 27	**544-11D5-11**	NPT1-1/2"x11.5
544-018-02	NPT1/4" x 18	**544-11D5-20**	NPT2"X11.5
544-018-33	NPT3/8"x18	**544-008-21**	NPT2-1/2"X8
544-014-01	NPT1/2" x 14	**544-008-30**	NPT3"X8
544-014-32	NPT3/4"x14	**544-008-32**	NPT3-1/2"X8
544-11D5-10	NPT1"x11.5	**544-008-40**	NPT4"X8

WITHWORTH PIPE THREAD GAUGE (G SERIES)

SERIES 535/536/545

RING GAUGE

535-0250-01

536-0250-01

- Conforms to standard ISO228
- Class B

Code(GO)	Code(NOGO)	Size	Code(GO)	Code(NOGO)	Size
535-0125-01	**536-0125-01**	G1/8-28	**535-1125-01**	**536-1125-01**	G1-1/8-11
535-0250-01	**536-0250-01**	G1/4-19	**535-1250-01**	**536-1250-01**	G1-1/4-11
535-0375-01	**536-0375-01**	G3/8-19	**535-1500-01**	**536-1500-01**	G1-1/2-11
535-0500-01	**536-0500-01**	G1/2-14	**535-1750-01**	**536-1750-01**	G1-3/4-11
535-0625-01	**536-0625-01**	G5/8-14	**535-2000-01**	**536-2000-01**	G2-11
535-0750-01	**536-0750-01**	G3/4-14	**535-2500-01**	**536-2500-01**	G2-1/2-11
535-0875-01	**536-0875-01**	G7/8-14	**535-3000-01**	**536-3000-01**	G3-11
535-1000-01	**536-1000-01**	G1-11	**535-4000-01**	**536-4000-01**	G4-11

PLUG GAUGE

- Conforms to standard ISO228

Code	Size	Code	Size
545-0125-01	G1/8-28	**545-1250-01**	G1-1/4-11
545-0250-01	G1/4-19	**545-1500-01**	G1-1/2-11
545-0375-01	G3/8-19	**545-1750-01**	G1-3/4-11
545-0500-01	G1/2-14	**545-2000-01**	G2-11
545-0625-01	G5/8-14	**545-2500-01**	G2-1/2-11
545-0750-01	G3/4-14	**545-3000-01**	G3-11
545-0875-01	G7/8-14	**545-4000-01G**	G4-11(GO)
545-1000-01	G1-11	**545-4000-01NG**	G4-11(NOGO)
545-1125-01	G1-1/8-11		

811 PROTRACTOR

- Graduation : 1°
- Made of stainless steel
- Satin chrome plated scale
- With locking screw

811-180-01

unit: mm

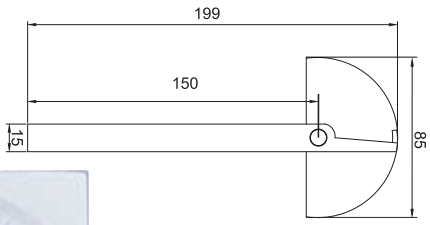

811-180-02

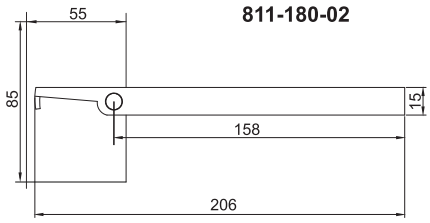

Code	Size	Range	Accuracy
811-180-01	85x150mm	0 - 180°	±0.3°
811-180-02	85x158mm	0 - 180°	±0.3°

L

SERIES 812 PROTRACTOR

- Graduation : 1°
- Satin chrome plated scale
- With locking screw

812-003-01

unit: mm

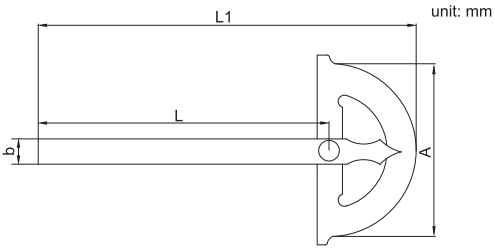

Code	Size(AxL)	Range	Accuracy	b	L1
812-003-01	80x120mm	0 - 180°	±0.3°	12	158
812-005-01	120x150mm	0 - 180°	±0.3°	12	205
812-006-01	150x200mm	0 - 180°	±0.3°	16	280
812-008-01	200x300mm	0 - 180°	±0.3°	20	413

PROTRACTOR SERIES 813

813-006-01

- Graduation : 1°
- Made of stainless steel
- Satin chrome plated scale
- The blade is moveable

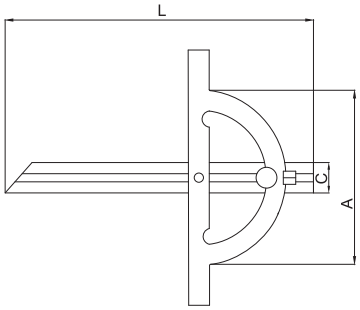

Code	Size (AxL)	Range	Accuracy	C
813-006-01	100x150mm	10 - 170°	±0.3°	18
813-012-01	150x300mm	10 - 170°	±0.3°	18
813-016-01	200x400mm	10 - 170°	±0.3°	20
813-020-01	250x500mm	10 - 170°	±0.3°	20
813-024-01	300x600mm	10 - 170°	±0.3°	20

DIGITAL PROTRACTOR 726

- Buttons: ON/OFF, HOLD, ZERO, ABS
- Measuring ranges can be set 0°~225°, -225°~0°, -45°~180°, -180°~45°
- Remove the locking screw for 360° range
- With level vial
- Automatic power off

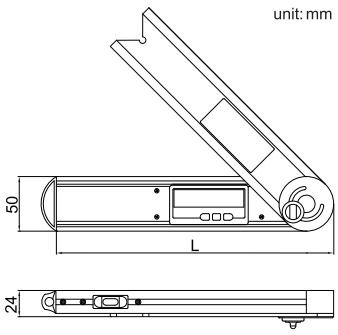

Code	Range	Resolution	Accuracy	Size (L)
726-360-01	0 - 360°	0.05°	±0.15°	250mm

SERIES 821 DIGITAL PROTRACTOR

- Resolution: 0.1°
- Buttons: on/off, zero
- With locking attachment
- Rule graduation: 1mm and 1/32"
- Auto power off

821-008-01

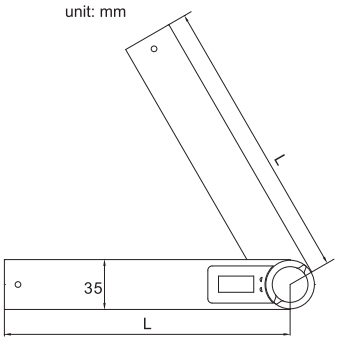

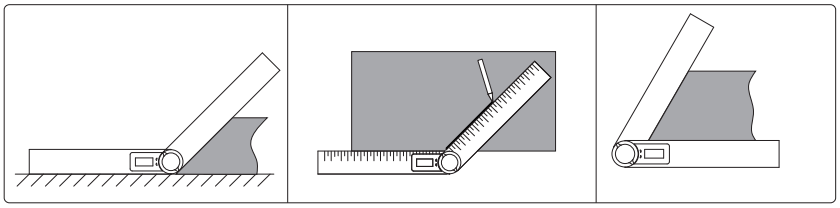

Code	Size(L)	Range	Accuracy
821-008-01	200mm	0 - 360°	±0.3°
821-012-01	300mm	0 - 360°	±0.3°

L

822 DIGITAL PROTRACTOR

- Button function:
  SET: preset the reading and change the measuring direction
  MODE: choose range 90°, 180°, 360°
  ZERO/ON/OFF: set zero and power on/off
- Data output
- With a 150mm blade and a 90° square
- Made of stainless steel

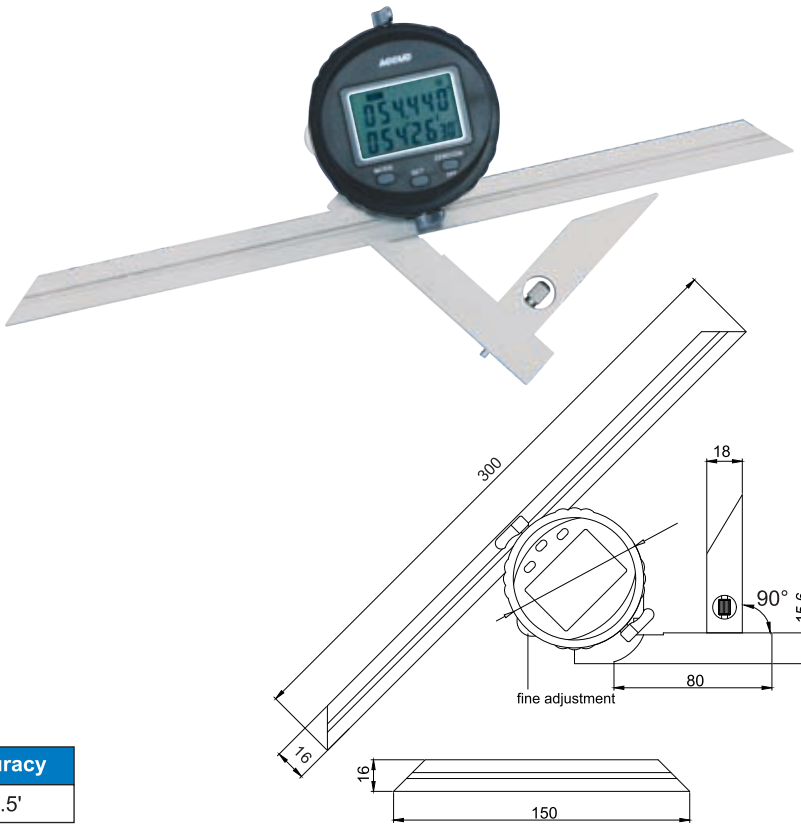

Code	Range	Resolution	Accuracy
822-360-01	0 - 360°	0.1°	±0.5'

UNIVERSAL PROTRACTOR 814

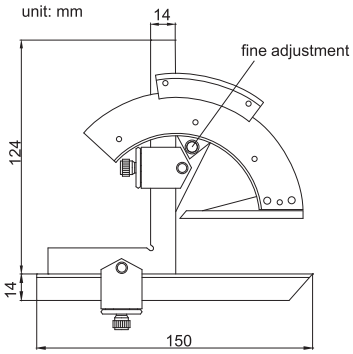

- Graduation : 2'
- Made of stainless steel
- Satin chrome plated scale

Code	Range	Accuracy
814-320-01	0 - 320°	±2'

UNIVERSAL PROTRACTOR 815

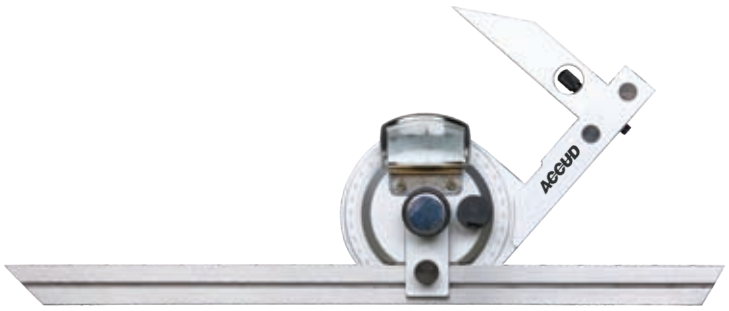

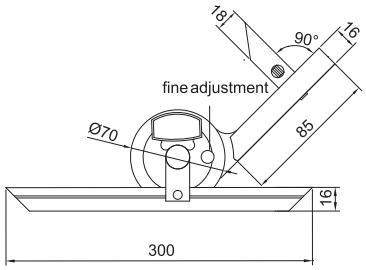

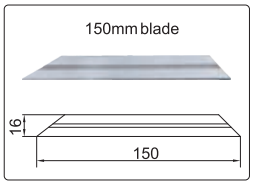

- Graduation : 5'
- Parallax-free reading
- With one blade: 150mm
- Made of stainless steel
- Optional accessory: clamp for height gages

Code	Range	Accuracy
815-360-01	0 - 360°	±5'

816 UNIVERSAL PROTRACTOR

- Graduation : 5'
- With one blade: 150mm
- Made of carbon steel
- Optional accessory: clamp for height gages

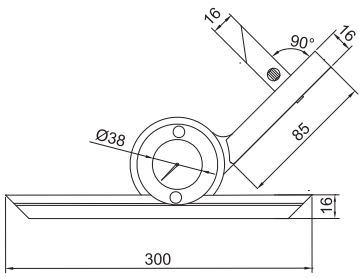

unit: mm

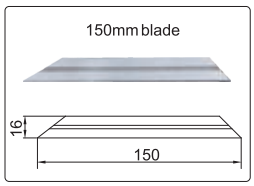

Code	Range	Accuracy
816-360-01	0 - 360°	±5'

817 COMBINATION SQUARE SET

- Protractor:
  Used to set an angle or angle measurement,
  measuring range: 0-180°, accuracy: ±7'
- Square:
  Used as 90° square or 45° square
  accuracy of 90° square: ±8',
  accuracy of 45° square: ±10'
- Rule:
  Used as rule , measuring range: 300mm/12"
  front side graduation: 0.5mm and 1/32"
  reverse side graduation: 1mm and 1/64"
- Center finder:
  Used to find the cylinder center,
  accuracy: ±0.15mm

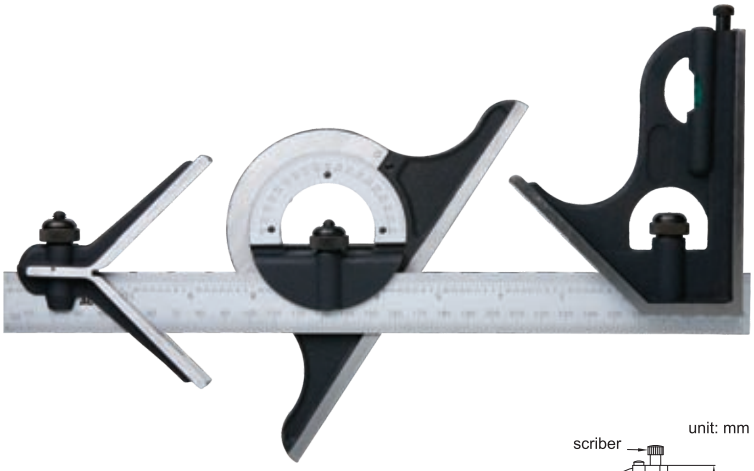

unit: mm

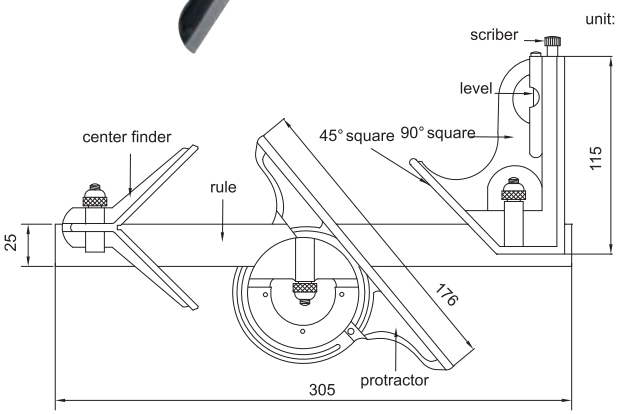

Code
817-180-02

GRANITE SQUARE SERIES 643

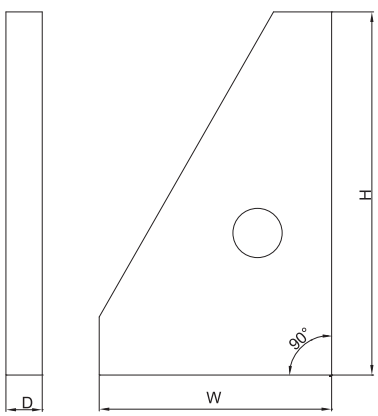

643-010-01

Code	Size(HxW)	Squareness	D
643-010-01	250x160mm	2.5μm	25mm
643-016-01	400x250mm	3.5μm	40mm
643-024-01	630x400mm	4.5μm	63mm

L

GRANITE SQUARE 644

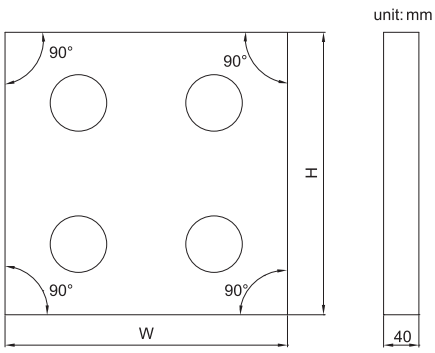

Code	Size(HxW)	Squareness
644-012-01	315x315mm	2.6μm

645 GRANITE SQUARE AND V-BLOCK

- Thread holes: M8

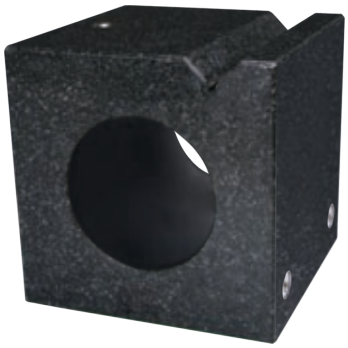

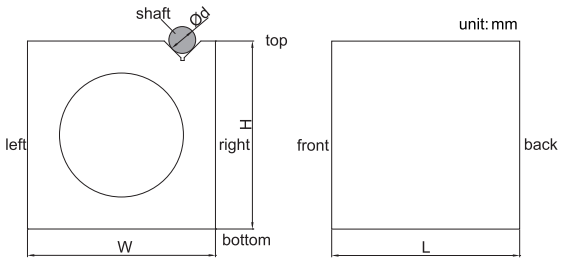

Code	Size(LxWxH)	Range of shafts (Ød)	Parallelism or squareness between top, bottom, left, right and back sides	Parallelism of V groove to left, right, top and bottom sides	Squareness of V groove to back side
645-006-01	160x160x160mm	6 - 42mm	8μm	8μm	8μm

L

SERIES 649 MAGNETIC SQUARE AND V–BLOCK

649-004-01

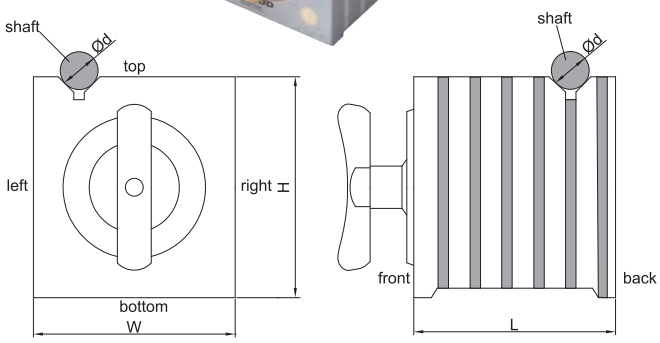

Code	Size(LxWxH)	Magnetic force	Range of shafts (Ød)	Parallelism or squareness between top, bottom, left, right and back sides	Parallelism or squareness of both V grooves to top, bottom, left, right and back sides
649-004-01	100x100x100mm	30kgf	6 - 36mm	10μm	10μm
649-006-01	150x150x150mm	40kgf	6 - 44mm	15μm	15μm

90° BEVELED EDGE SQUARE

SERIES 832

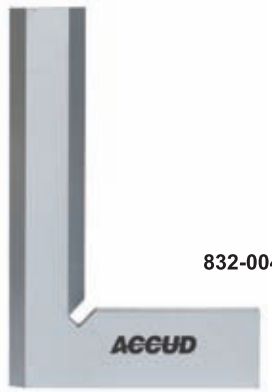

832-004-00

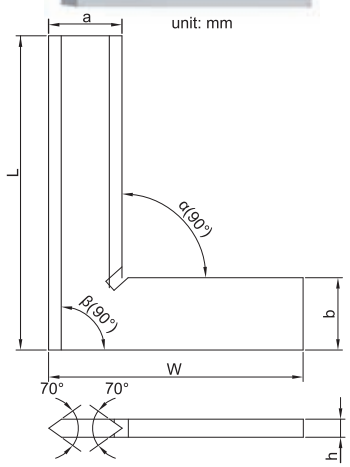

- Two beveled measuring faces
- Made of hardened stainless steel
- Satin chrome plating

Grade 0

Code	Size(LxW)	Squareness(α)	Squareness(β)	a	b	h
832-002-10	50x40mm	6μm	6μm	13	13	4
832-003-10	75x50mm	6μm	7μm	15	15	4
832-004-10	100x70mm	7μm	7μm	20	20	5
832-006-10	150x100mm	7μm	8μm	30	30	6
832-008-10	200x130mm	8μm	9μm	34	34	7
832-010-10	250x165mm	9μm	10μm	35	35	7
832-012-10	300x200mm	10μm	11μm	40	40	8

Grade 00

Code	Size(LxW)	Squareness(α)	Squareness(β)	a	b	h
832-002-00	50x40mm	2.4μm	2.5μm	13	13	4
832-003-00	75x50mm	2.6μm	2.8μm	15	15	4
832-004-00	100x70mm	2.8μm	3.0μm	20	20	5
832-006-00	150x100mm	3.2μm	3.5μm	30	30	6
832-008-00	200x130mm	3.7μm	4.0μm	34	34	7
832-010-00	250x165mm	4.2μm	4.5μm	35	35	7
832-012-00	300x200mm	4.6μm	5.0μm	40	40	8

90° FLAT EDGE SQUARE

SERIES 841

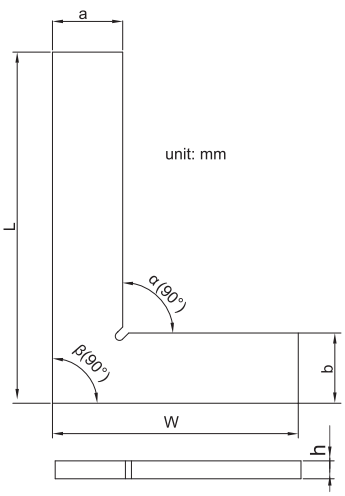

841-004-10

- DIN875 grade 0
- Made of hardened stainless steel

Code	Size(LxW)	Squareness(α)	Squareness(β)	a	b	h
841-002-10	50x40mm	6μm	6μm	15	15	4
841-003-10	75x50mm	6μm	7μm	15	15	4
841-004-10	100x70mm	7μm	7μm	20	20	5
841-006-10	150x100mm	7μm	8μm	30	30	6
841-008-10	200x130mm	8μm	9μm	34	34	7
841-010-10	250x165mm	9μm	10μm	35	35	7
841-012-10	300x200mm	10μm	11μm	40	40	8

SERIES 842 — 90° FLAT EDGE SQUARE WITH WIDE BASE

- DIN875 grade 0
- Made of hardened stainless steel

842-004-10

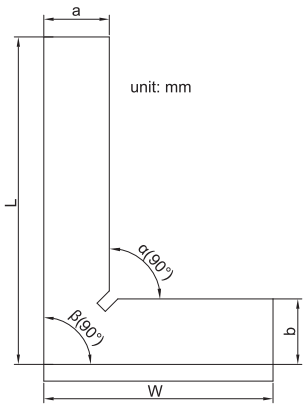

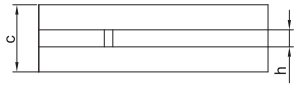

Code	Size(LxW)	Squareness(α)	Squareness(β)	a	b	c	h
842-002-10	50x40mm	6μm	6μm	13	13	13	4
842-003-10	75x50mm	6μm	6μm	15	15	15	4
842-004-10	100x70mm	7μm	7μm	20	20	20	5
842-006-10	150x100mm	7μm	7μm	30	30	30	6
842-008-10	200x130mm	8μm	8μm	34	34	30	7
842-010-10	250x165mm	9μm	9μm	35	35	35	7
842-012-10	300x200mm	10μm	10μm	40	40	40	8

L

SERIES 843 — 90° FLAT EDGE SQUARE WITH WIDE BASE

- DIN875 grade 0
- Made of hardened stainless steel

843-004-10

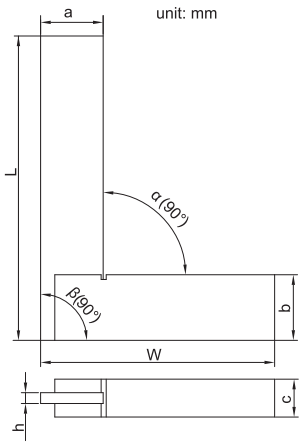

Code	Size(LxW)	Squareness(α)	Squareness(β)	a	b	c	h
843-002-10	50x40mm	6μm	6μm	12	12	10	3
843-003-10	75x50mm	6μm	6μm	14	14	10	3
843-004-10	100x70mm	7μm	7μm	18	18	10	3
843-006-10	150x100mm	7μm	7μm	22	22	12	4
843-008-10	200x130mm	8μm	8μm	25	25	12	4

MACHINIST SQUARE WITH WIDE BASE

SERIES 845

- DIN875 grade 2
- Made of carbon steel

845-004-02

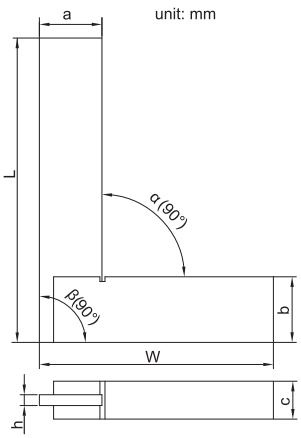

Code	Size(LxW)	Squareness(α)	Squareness(β)	a	b	c	h
845-002-02	50x40mm	24μm	25μm	16	12	9	3
845-003-02	75x50mm	26μm	28μm	16	16	9	3
845-004-02	100x70mm	28μm	30μm	19	19	12	3
845-006-02	150x100mm	33μm	35μm	25	25	16	3
845-008-02	200x130mm	37μm	40μm	30	32	16	4
845-010-02	250x165mm	42μm	45μm	30	32	19	4
845-012-02	300x200mm	47μm	50μm	32	32	19	4
845-016-02	400x250mm	56μm	60μm	38	38	22	5
845-020-02	500x300mm	65μm	70μm	45	50	25	6
845-024-02	600x350mm	75μm	80μm	50	50	30	6
845-030-02	750x400mm	90μm	95μm	55	55	50	6

L

ADJUSTABLE SQUARE

831

- The straight edge can move and can be locked by the screw
- Made of hardened stainless steel

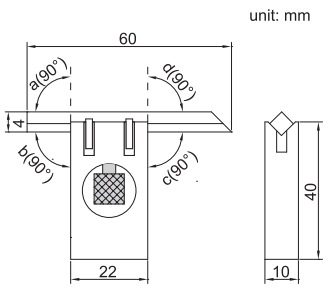

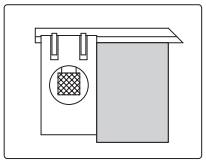

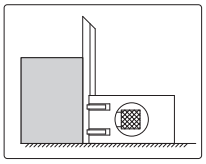

Code	Squareness (a, b, c, d)
831-002-10	7μm

SERIES 846 — 45° SQUARE

- Made of hardened stainless steel

846-005-02

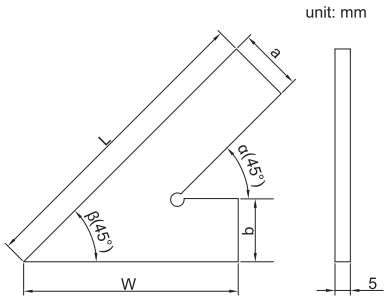

Code	Size(LxW)	Accuracy(α)	Accuracy(β)	a	b
846-004-02	100x70mm	27μm	30μm	20	20
846-005-02	120x80mm	29μm	32μm	20	20
846-006-02	150x100mm	32μm	35μm	20	20
846-008-02	200x130mm	36μm	40μm	25	25

L

SERIES 847 — 60° SQUARE

- Made of hardened stainless steel

847-004-02

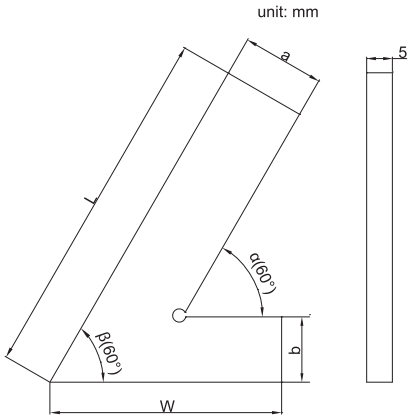

Code	Size(LxW)	Accuracy(α)	Accuracy(β)	a	b
847-004-02	100x70mm	28μm	30μm	20	20
847-005-02	120x80mm	30μm	32μm	20	20
847-006-02	150x100mm	32μm	35μm	20	20
847-008-02	200x130mm	37μm	40μm	25	25

120° SQUARE

SERIES 848

- Made of hardened stainless steel

848-004-02

unit: mm

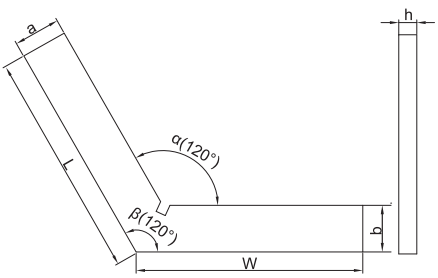

Code	Size(LxW)	Accuracy(α)	Accuracy(β)	a	b	h
848-002-02	50x50mm	24μm	25μm	15	15	5
848-003-02	75x75mm	26μm	28μm	20	20	5
848-004-02	100x100mm	29μm	30μm	20	20	5
848-006-02	150x150mm	34μm	35μm	25	25	5
848-008-02	200x200mm	38μm	40μm	30	30	7

L

135° SQUARE WITH WIDE BASE

SERIES 849

- Made of hardened stainless steel

849-005-02

unit: mm

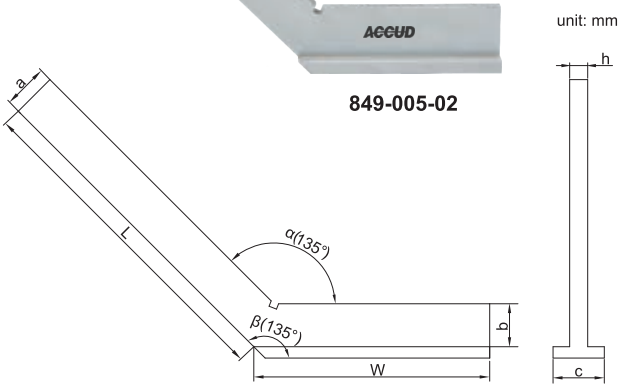

Code	Size(LxW)	Accuracy(α)	Accuracy(β)	a	b	c	h
849-004-02	100x70mm	29μm	31μm	20	20	20	5
849-005-02	120x80mm	31μm	33μm	20	20	20	5
849-006-02	150x100mm	34μm	36μm	20	20	20	5
849-008-02	200x130mm	39μm	41μm	30	30	30	7

SERIES 642 GRANITE STRAIGHT EDGE

642-020-01

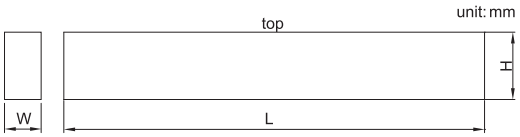

Code	Length(L)	Flatness of top side	W	H
642-020-01	500mm	2.8μm	55	100
642-040-01	1000mm	3.3μm	60	120

648 GRANITE PARALLEL SET

- Made of granite
- Hard and no rusty, no dimensional change
- over time or temperature change
- Two parallels per set

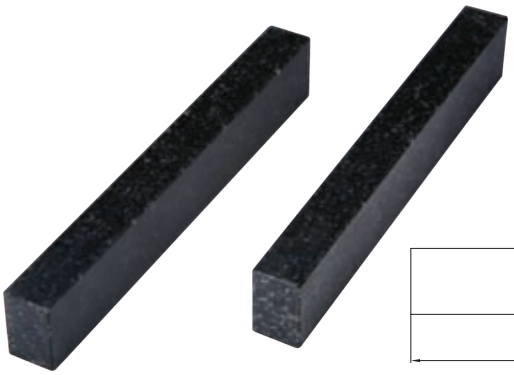

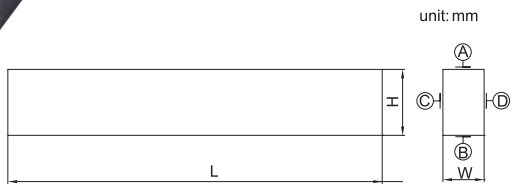

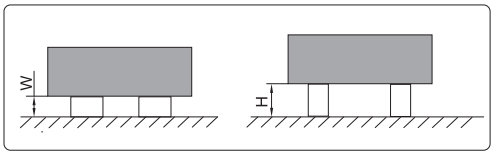

Code	Size(LxWxH)	Parallelism between A and B	Parallelism between C and D	Height difference of a matched pair
648-250-01	250x25x40mm	5μm	5μm	5μm

SERIES 647 MAGNALIUM STRAIGHT EDGES

- Made of magnalium, light weight, non-deform, no rusty

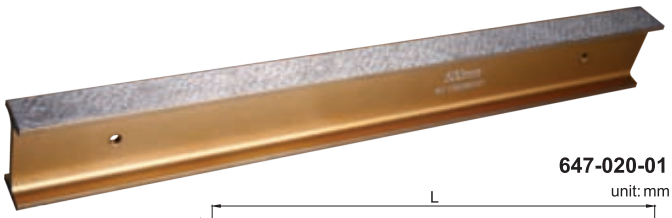

647-020-01

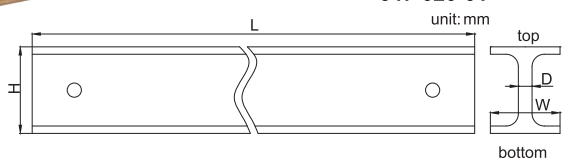

Code	Length(L)	Flatness of top and bottom	Parallelism between top and bottom	H	W	D
647-020-01	500mm	3μm	4μm	60	30	5
647-040-01	1000mm	5μm	8μm	60	30	5
647-060-01	1500mm	15μm	22μm	100	40	7
647-080-01	2000mm	18μm	27μm	100	40	7

STRAIGHT EDGE RULE — SERIES 991

991-012-01

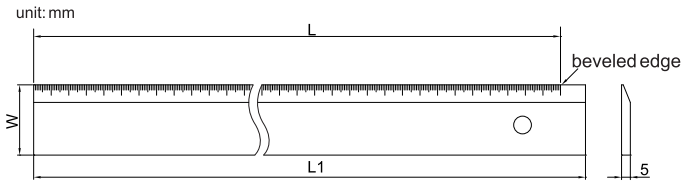

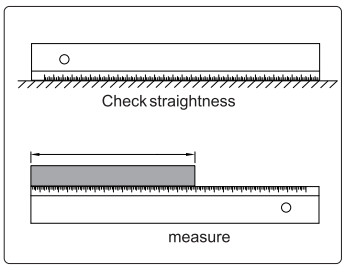

- Check straightness, as well as for measurement
- Made of hardened tool steel, chrome plated

Code	Range(L)	Straightness	W	L1
991-012-01	300mm	0.02mm	40mm	320mm
991-020-01	500mm	0.03mm	40mm	520mm
991-040-01	1000mm	0.04mm	50mm	1020mm

STRAIGHT EDGE — SERIES 994

994-004-01

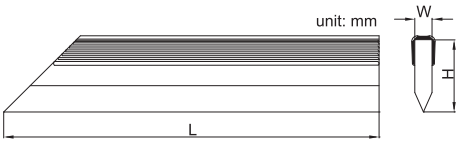

- Beveled edge to check the flatness DIN874
- Made of stainless steel
- Stain chrome plating

Code	Size (L)	Straightness	W	H
994-002-01	50mm	2.2μm	5	20
994-003-01	75mm	2.3μm	5	25
994-004-01	100mm	2.4μm	5	25
994-005-01	125mm	2.5μm	5	25
994-006-01	150mm	2.6μm	6	30
994-008-01	200mm	2.8μm	6	30
994-010-01	250mm	3.0μm	8	40
994-012-01	300mm	3.2μm	8	40
994-016-01	400mm	3.6μm	10	50
994-020-01	500mm	4.0μm	10	50

SERIES 713 BLOCK LEVEL

- For use in setting machined surfaces precisely horizontal
- Sensibility: 0.02mm/m per division
- Vee angle : 140°

713-006-02

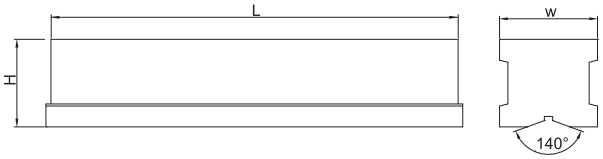

unit: mm

Code	Size(L)	H	W
713-006-02	150mm	40	45
713-008-02	200mm	42	47
713-012-02	300mm	45	50

SERIES 711 FRAME LEVEL

- For using setting machined surfaces precisely horizontal and vertical
- Sensibility: 0.02mm/m per division
- With two vee and two flat referece faces

711-006-02

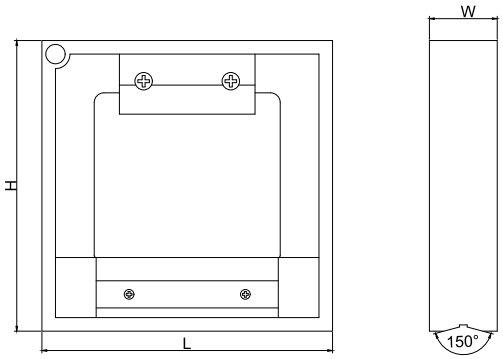

Code	Size(LxHxW)
711-006-02	150x150x35mm
711-008-02	200x200x42mm
711-012-02	300x300x42mm

DIGITAL LEVEL 721

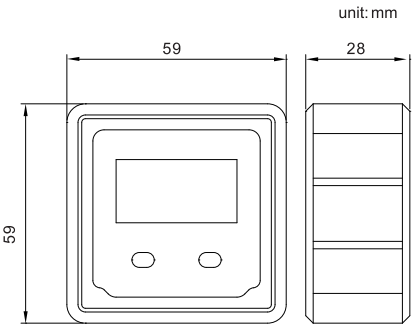

- Use as level or protractor
- Accuracy : ±0.1°(vertical and horizontal), ±0.2°(other direction)
- Absolute horizontal reference can save in memory for ever
- Button: on/off, zero
- Magnetic base
- Use in 4 directions
- Automatic power off

use as level

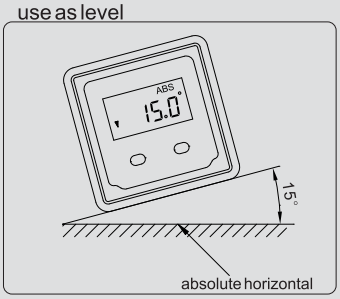

use as protractor

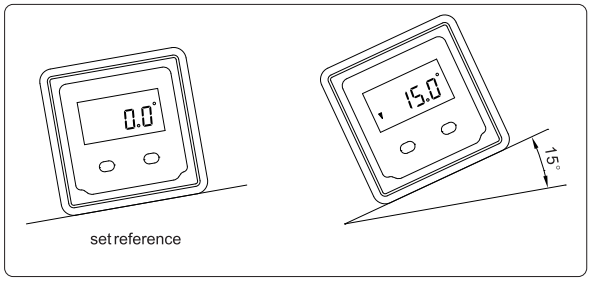

Code	Range	Resolution
721-180-01	0 - 360°(90°x4)	0.05°

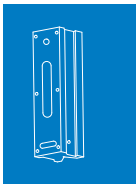

DIGITAL LEVEL 723

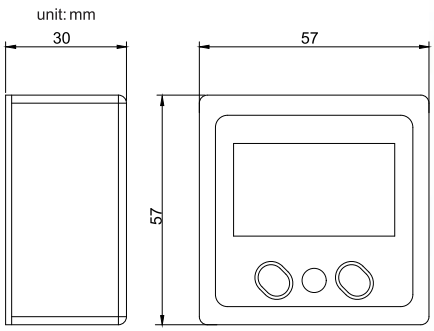

- Use as level or protractor
- Use in 4 directions
- Magnetic base
- Accuracy : ±0.1°(vertical and horizontal), ±0.2°(other direction)
- Metal cover
- Adjust the display direction automatically

use as level

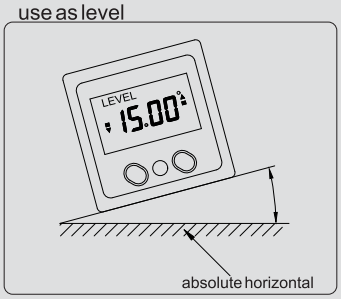

use as protractor

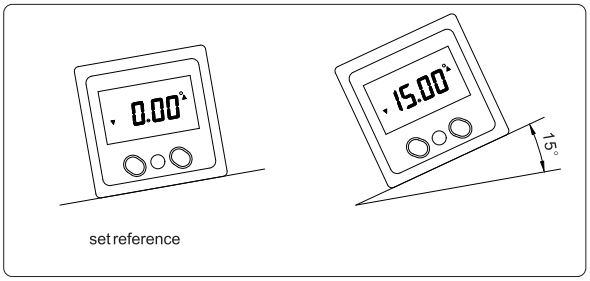

Code	Range	Resolution
723-360-01	0 - 360° (4x90°)	0.05°

722 DIGITAL LEVEL

- Use as level or protractor
- Resolution: 0.05°
- Accuracy : ±0.1°(vertical and horizontal), ±0.2°(other direction)
- Magnetic base, with groove
- Aluminum frame provides with high rigidity and low weight
- Absolute horizontion reference can save in memory for ever

unit: mm

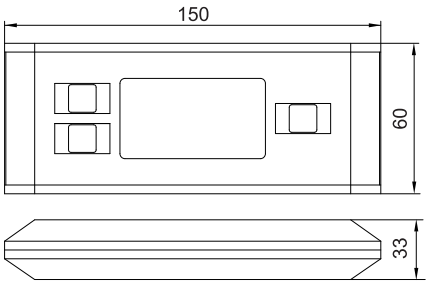

use as level

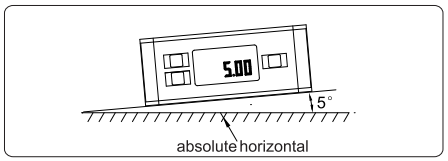

use as protractor

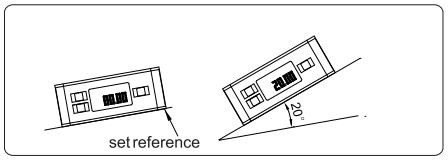

use in 4 directions

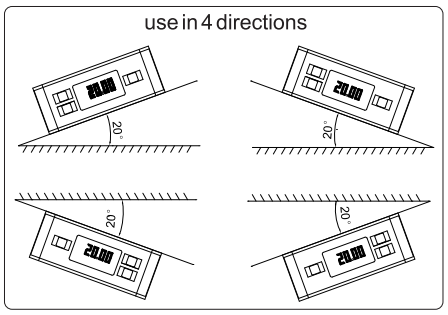

Code	Range	Dimension(LxWx H)
722-360-01	0 - 360° (90°x4)	150x60x33mm

DIGITAL LEVEL 724

- Use as level or protractor
- Accuracy : ±0.1°(vertical and horizontal), ±0.2°(other direction)
- Buttons: on/off, CAL, hold, alarm, Mode, Ref
- With vertical and horizontal vials
- Magnetic base
- Adjust the display direction automatically

unit: mm

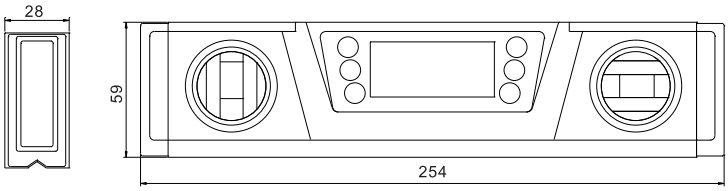

Code	Range	Resolution
724-360-01	0 - 360° (4x90°)	0.05°

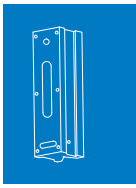

DIGITAL LEVEL 725

- Use as level or protractor
- Accuracy : ±0.1°(vertical and horizontal), ±0.2°(other direction)
- Buttons: on/off, ABS, hold, alarm unit, backlight
- With vertical and horizontal vials
- Absolute horizontion reference can save in memory for ever
- Magnetic base
- Adjust the display direction automatically

unit: mm

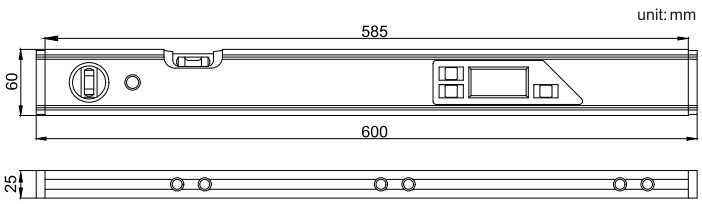

Code	Range	Resolution
725-360-01	0 - 360° (4x90°)	0.05°

SERIES 912 FEELER

- Meets DIN2275
- Accuracy: ±(3+T/80)μm, T is the thickness of leaves, unit: μm

912-100-20

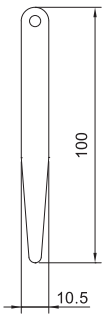

Code	Range	Quantity	Leaves thickness (mm)
912-050-13	0.03 - 0.50mm	13	0.03, 0.04, 0.05, 0.06, 0.07, 0.08, 0.09, 0.10, 0.15, 0.20, 0.30, 0.40, 0.50
912-100-13	0.05 - 1.00mm	13	0.05, 0.10, 0.15, 0.20, 0.25, 0.30, 0.40, 0.50, 0.60, 0.70, 0.80, 0.90, 1.00
912-100-17	0.02 - 1.00mm	17	0.02, 0.03, 0.04, 0.05, 0.06, 0.07, 0.08, 0.09, 0.10, 0.15, 0.20, 0.25, 0.30, 0.40, 0.50, 0.75, 1.00
912-100-20	0.05 - 1.00mm	20	0.05, 0.10, 0.15, 0.20, 0.25, 0.30, 0.35, 0.40, 0.45, 0.50, 0.55, 0.60, 0.65, 0.70, 0.75, 0.80, 0.85, 0.90, 0.95, 1.00
912-100-32	0.03 - 1.00mm	32	0.03, 0.04, 0.05, 0.06, 0.07, 0.08, 0.09, 0.10, 0.13, 0.15, 0.18, 0.20, 0.23, 0.25, 0.28, 0.30, 0.33, 0.35, 0.38, 0.40, 0.45, 0.50, 0.55, 0.60, 0.63, 0.65, 0.70, 0.75, 0.80, 0.85, 0.90, 1.00

911 FEELER

- Meets DIN2275
- Accuracy: ±(3+T/80)μm, T is the thickness of leaves , unit: μm

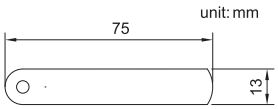

Code	Range	Quantity	Leaves thickness (mm)
911-100-25	0.04 - 1.00mm	25	0.04, 0.05, 0.06, 0.07, 0.08, 0.09, 0.10, 0.15, 0.20, 0.25, 0.30, 0.35, 0.40, 0.45, 0.50, 0.55, 0.60, 0.65, 0.70, 0.75, 0.80, 0.85, 0.90, 0.95, 1.00

FEELER SERIES 913/914/915

unit: mm

913-100-20

- Meets DIN2275
- Accuracy: ±(3+T/80)μm, T is the thickness of leaves, unit: μm

Code	Range	Quantity	Leaves thickness (mm)	L
913-100-13	0.05 - 1.00mm	13	0.05, 0.10, 0.15, 0.20, 0.25, 0.30, 0.40, 0.50, 0.60, 0.70, 0.80, 0.90, 1.00	150
914-100-13	0.05 - 1.00mm	13		200
915-100-13	0.02 - 1.00mm	13		300
913-100-17	0.02 - 1.00mm	17	0.02, 0.03, 0.04, 0.05, 0.06, 0.07, 0.08, 0.09, 0.10, 0.15, 0.20, 0.25, 0.30, 0.40, 0.50, 0.75, 1.00	150
914-100-17	0.02 - 1.00mm	17		200
915-100-17	0.05 - 1.00mm	17		300
913-100-20	0.05 - 1.00mm	20	0.05, 0.10, 0.15, 0.20, 0.25, 0.30, 0.35, 0.40, 0.45, 0.50, 0.55, 0.60, 0.65, 0.70, 0.75, 0.80, 0.85, 0.90, 0.95, 1.00	150
914-100-20	0.05 - 1.00mm	20		200
915-100-20	0.05 - 1.00mm	20		300

FEELER TAPE SERIES 916

916-010-01

- Used to check the spacing thickness
- Made of hardened alloy steel
- Length 5m
- Width 13mm

Code	Thickness	Accuracy
916-002-01	0.02mm	±4μm
916-003-01	0.03mm	±4μm
916-004-01	0.04mm	±4μm
916-005-01	0.05mm	±4μm
916-006-01	0.06mm	±4μm
916-007-01	0.07mm	±5μm
916-008-01	0.08mm	±5μm
916-009-01	0.09mm	±5μm
916-010-01	0.10mm	±5μm
916-020-01	0.20mm	±8μm

Code	Thickness	Accuracy
916-025-01	0.25mm	±9μm
916-030-01	0.30mm	±9μm
916-040-01	0.40mm	±12μm
916-050-01	0.50mm	±14μm
916-060-01	0.60mm	±14μm
916-070-01	0.70mm	±17μm
916-080-01	0.80mm	±19μm
916-090-01	0.90mm	±22μm
916-100-01	1.00mm	±24μm

917 INCH FEELER GAUGE

- .010" is made of brass, others are made of hardened alloy steel
- Each blade is marked with inch/metric size

Code	Range	Quantity of Leaves
917-035-31	.0015" ~ .035"	32

Thickness of leaves included	Accuracy
.010" (brass)	±.00039"
.0015", .002"	±.0002"
.0025"~ .007"	±.00028"
.008", .009"	±.00035"
.010", .011"	±.00039"
.012", .013"	±.00047"
.014", .015"	±.00051"
.016", .017"	±.00055"
.018", .019"	±.00059"
.020", .021"	±.00067"
.022", .023"	±.00071"
.024", .025", .026"	±.00075"
.028"	±.00091"
.030"	±.00094"
.032", .035"	±.00102"

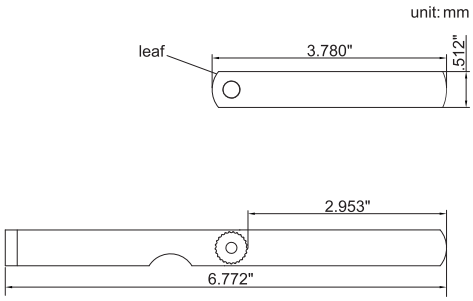

SERIES 922/923/924/925 PITCH GAUGE

- Measure the pitch of thread
- Accuracy: ±0.07mm

922-007-22

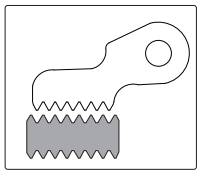

METRIC 60° SCREW

Code	Range	Quantity	Leaves pitch
922-007-22	0.4 - 7.0mm	22	0.4, 0.5, 0.6, 0.7, 0.75, 0.8, 0.9, 1, 1.25, 1.5, 1.75, 2, 2.5, 3, 3.5, 4, 4.5, 5, 5.5, 6, 6.5, 7mm
922-007-24	0.25 - 7.0mm	24	0.25, 0.3, 0.35, 0.4, 0.5, 0.7, 0.75, 0.8, 0.9, 1, 1.25, 1.5, 1.75, 2, 2.5, 3, 3.5, 4, 4.5, 5, 5.5, 6, 6.5, 7mm
922-006-24	0.25 - 6.0mm	24	0.25, 0.3, 0.35, 0.4, 0.45, 0.5, 0.6, 0.7, 0.75, 0.8, 0.9, 1, 1.25, 1.5, 1.75, 2, 2.5, 3, 3.5, 4, 4.5, 5, 5.5, 6mm
922-025-28	0.25 - 2.5mm	28	0.25, 0.3, 0.35, 0.4, 0.45, 0.5, 0.55, 0.6, 0.65, 0.7, 0.75, 0.8, 0.9, 1.0, 1.1, 1.2, 1.3, 1.4, 1.5, 1.6, 1.7, 1.8, 1.9, 2.0, 2.5mm

UNIFIED 60° SCREW

Code	Range	Quantity	Leaves pitch
923-042-30	4 - 42TPI	30	4, 4-1/2, 5, 5-1/2, 6, 7, 8, 9, 10, 11, 11-1/2, 12, 13, 14, 15, 16, 18, 20, 22, 24, 26, 27, 28, 30, 32, 34, 36, 38, 40, 42TPI

WHITWORTH 55° SCREW

Code	Range	Quantity	Leaves pitch
924-042-30	4 - 42TPI	30	4, 4-1/2, 5, 5-1/2, 6, 7, 8, 9, 10, 11, 12, 13, 14, 15, 16, 18, 19, 20, 22, 24, 26, 27, 28, 30, 32, 34, 36, 38, 40, 42TPI
924-062-28	4 - 62TPI	28	4, 4-1/2, 5, 6, 7, 8, 9, 10, 11, 12, 13, 14, 16, 18, 19, 20, 22, 24, 25, 26, 28, 30, 32, 36, 40, 48, 60, 62TPI

METRIC 60° AND WHITWORTH 55° SCREW

Code	Range	Quantity	Leaves pitch
925-062-52	0.25 - 6.0mm and 4 - 62TPI	52	pitch of **922-006-24** and **924-062-28**

PITCH GAUGE SERIES 921

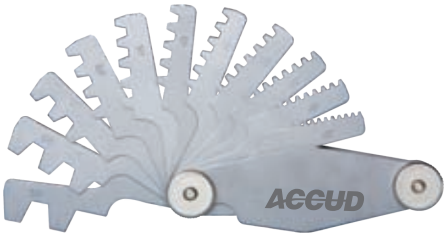

- Measure the pitch of thread
- Accuracy: ±0.07mm

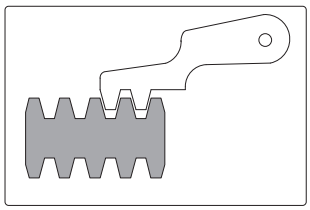

921-020-12

Code	Range	Thread	Quantity	Leaves pitch(mm)
921-020-12	2 - 20mm	Tr30°	12	2, 3, 4, 5, 6, 7, 8, 9, 10, 12, 16, 20mm
921-012-16	1 - 12TPI	ACME29°	16	1, 1-1/3, 1-1/2, 1-3/4, 2, 2-1/2, 3, 3-1/2, 4, 5, 6, 7, 8, 9, 10, 12TPI

CENTER GAUGE SERIES 926

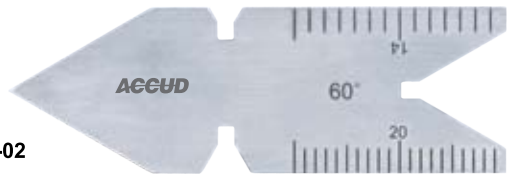

926-060-02

- Check the screw angle and picth
- Accuracy: ±30'

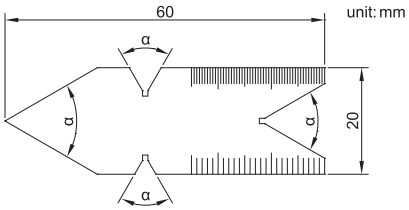

Code	Screw type	Angle(α)	Graduation
926-060-01	metric 60°	60°	0.5mm and 1mm
926-060-02	unified 60°	60°	front side: 1/14"and 1/20", reverse side: 1/24" and 1/32"
926-055-01	whitworth 55°	55°	front side: 1/14" and 1/20", reverse side: 1/24" and1/32"

THREAD GAUGE SERIES 927

927-008-01

- To check and set screw cutting tools
- Angle accuracy: ±10min.

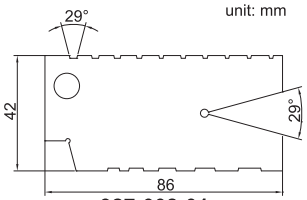

927-008-01

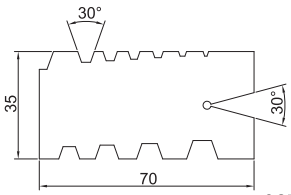

927-012-01

Code	Range	Thread type	Pitch
927-008-01	1 - 10TPI	ACME 29°	1, 1-1/3, 1-1/2, 1-3/4, 2, 2-1/2, 3, 4, 5, 6, 7, 8, 9, 10TPI
927-012-01	2 - 12mm	Tr 30°	2, 3, 4, 5, 6, 7, 8, 9, 10, 12mm

931 ANGLE GAUGE

- Check the coangle
- Accuracy: ±30'

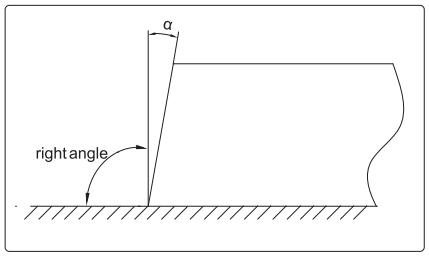

Code	Range	Quantity	Leaves angle(α)
931-045-20	1°-45°	20	1°, 2°, 3°, 4°, 5°, 6°, 7°, 8°, 9°, 10°, 12°, 14°, 16°, 18°, 20°, 25°, 30°, 35°, 40°, 45°

932 ANGLE GAUGE SET

- Each blade checks primary, 1/2 primary and complementary angles

Code	Quantity of leaves	Accuracy
932-018-01	18	±10'

Primary angle	½ primary angle	Complementary angle
5°	2°30'	175°
10°	5°	170°
15°	7°30'	165°
20°	10°	160°
25°	12°30'	155°
30°	15°	150°
35°	17°30'	145°
40°	20°	140°
45°	22°30'	135°
50°	25°	130°
55°	27°30'	125°
60°	30°	120°
65°	32°30'	115°
70°	35°	110°
75°	37°30'	105°
80°	40°	100°
85°	42°30'	95°
90°	45°	90°

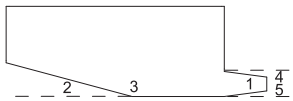

Angle 1, 2 are primary angle
Angle 3 is complementary angle
Angle 4, 5 are 1 / 2 primary angle

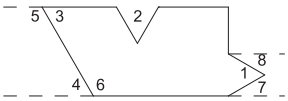

Angle 1, 2, 3, 4 are primary angle
Angle 5, 6 are complementary angle
Angle 7, 8 are 1 / 2 primary angle

RADIUS GAUGE SERIES 941

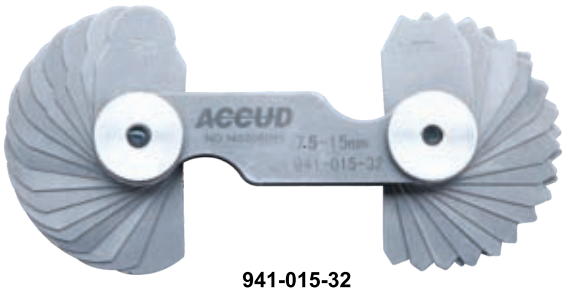

941-015-32

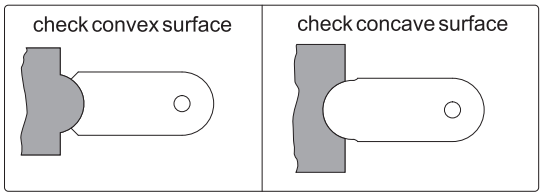

- Check the radius
- With concave and convex surface in each size

Code	Range	Quantity	Accuracy	Leaves radius (mm)
941-007-34	1 - 7mm	17x2	±0.03mm	1, 1.25, 1.5, 1.75, 2, 2.25, 2.5, 2.75, 3, 3.5, 4, 4.5, 5, 5.5, 6, 6.5, 7
941-015-32	7.5 - 15mm	16x2	±0.035mm	7.5, 8, 8.5, 9, 9.5, 10, 10.5, 11, 11.5, 12, 12.5, 13, 13.5, 14, 14.5, 15
941-025-30	15.5 - 25mm	15x2	±0.042mm	15.5, 16, 16.5, 17, 17.5, 18, 18.5, 19, 19.5, 20, 21, 22, 23, 24, 25

RADIUS GAUGE 942

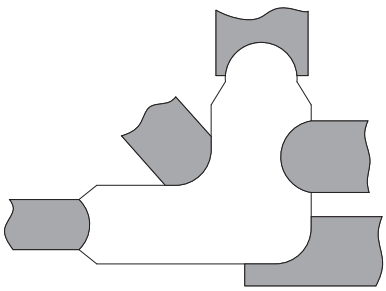

2 concave and 3 convex surfaces

Handle

- Each piece has 2 concave and 3 convex surfaces
- With handle
- ±0.05mm

Code	Range	Quantity	Included radius(mm)
942-013-26	0.5 - 13mm	26	0.5, 1, 1.5, 2, 2.5, 3, 3.5, 4, 4.5, 5, 5.5, 6, 6.5, 7, 7.5, 8, 8.5, 9, 9.5, 10, 10.5, 11, 11.5, 12, 12.5, 13

951 TELESCOPING GAUGE SET

- 6 gauges per set
- For quick measurement of inside diameter of holes and width of slots
- Satin chrome finish

unit: mm

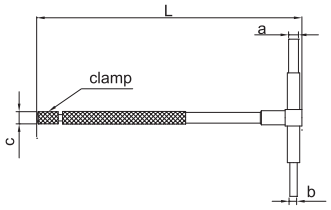

Code	Each gauge range	L	a	b	c
951-006-01	8-12.7mm	115mm	Ø3.9mm	Ø2.9mm	Ø6.2mm
	12.7-19mm	115mm	Ø5.3mm	Ø3.8mm	Ø6.2mm
	19-32mm	115mm	Ø5.3mm	Ø3.8mm	Ø6.2mm
	32-54mm	137mm	Ø7.6mm	Ø6.1mm	Ø7.2mm
	54-90mm	137mm	Ø7.6mm	Ø6.1mm	Ø7.2mm
	90-150mm	137mm	Ø7.6mm	Ø6.1mm	Ø7.2mm

952 SMALL HOLE GAUGE SET

- 4 gauges per set
- For small holes, slots and grooves, etc.
- Satin chrome finish

unit: mm

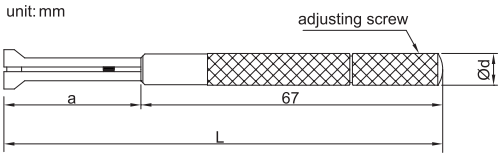

Code	Total Range	Set Included
952-004-01	3-13mm	3-5mm, 5-7.5mm 7.5-10mm, 10-13mm

Range	L	a	Ød
3-5mm	90	22.5	5.5
5-7.5mm	97.6	30	5.5
7.5-10mm	102.8	35	8.5
10-13mm	108	40	8.5

LONG HANDLE TELESCOPING GAUGE

SERIES 953

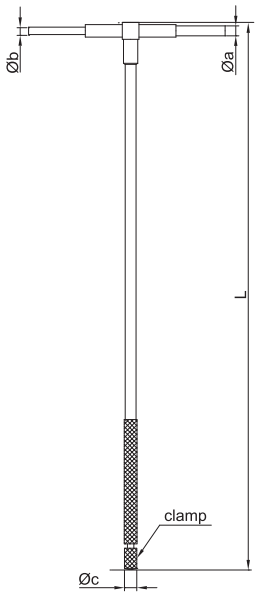

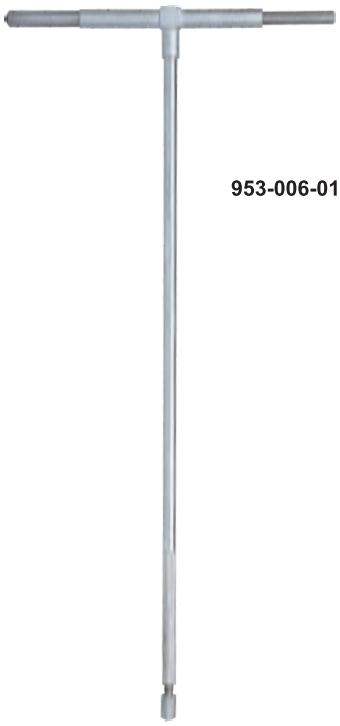

953-006-01

- For quick measuring inside diameter of deep holes and width of slots
- Satin chrome finish

Code	Range	L	Øa	Øb	Øc
953-001-01	8-12.7mm	250mm	3.9mm	2.9mm	6.2mm
953-002-01	12.7-19mm	250mm	5.3mm	3.8mm	6.2mm
953-003-01	19-32mm	250mm	5.3mm	3.8mm	6.2mm
953-004-01	32-54mm	300mm	7.6mm	6.1mm	7.2mm
953-005-01	54-90mm	300mm	7.6mm	6.1mm	7.2mm
953-006-01	90-150mm	300mm	7.6mm	6.1mm	7.2mm

TAPER GAUGE

961

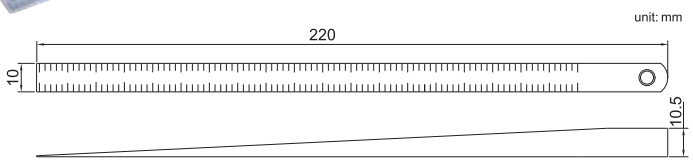

- Measure the gap width
- Stain chrome plated reading surface
- Made of the stainless steel

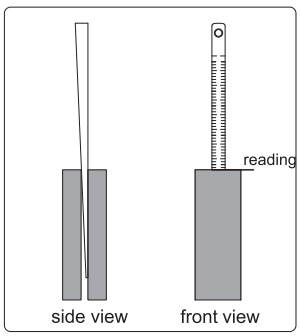

Code	Range	Graduation	Accuracy	L	W	H
961-004-05	0.2 - 4mm	0.05mm	±0.05mm	120	12.5	4.3
961-006-05	0.4 - 6mm	0.05mm	±0.05mm	166	11.5	6.5
961-010-05	0.5 - 10mm	0.05mm	±0.05mm	225	12.5	10.5
961-015-05	0.5 - 15mm	0.1mm	±0.05mm	184	11	16

SERIES 962 TAPER GAUGE

- Measure the groove width and hole size
- Made of the stainless steel

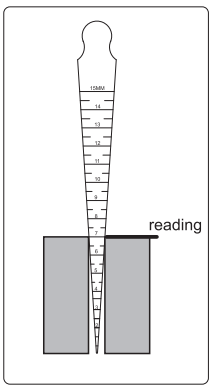

front side reverse side

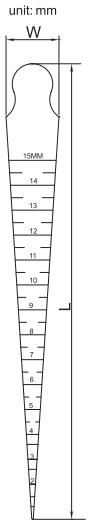

962-015-05

Code	Range	Graduation	Accuracy	L	W
962-015-05	0.8-15mm	0.1mm	±0.1mm	146	17
962-030-05	15-30mm	0.1mm	±0.1mm	159	30.4
962-045-05	30-45mm	0.1mm	±0.1mm	166	45.4
962-060-05	45-60mm	0.1mm	±0.1mm	170	60.5

963 DIGITAL TAPER GAUGE

- Measuring opening, slot width
- Resolution: 0.01mm/0.0005"
- Buttons: on/off, zero, mm/inch
- Data output
- Automatic power on/off
- Made of stainless steel

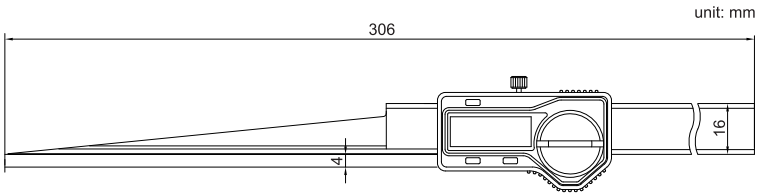

measure slot width(reading/10)

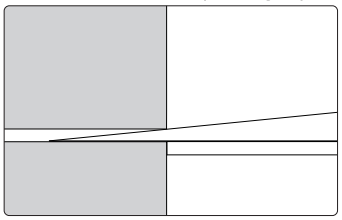

Code	Range	Accuracy
963-010-11	0.2-10mm/0.008-0.394"	±0.03mm

TAPER BORE GAUGE SERIES 964

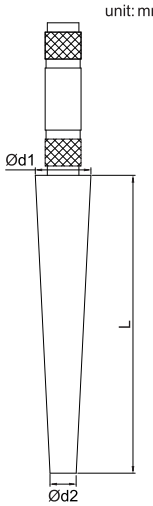

964-015-11

- Quick measuring diameter of the bore
- Graduation: 0.1mm
- Hardened steel, HRC50-58
- Satin chrome plated surface
- Aluminium oxided handle

Code	Range	Accuracy	L	Ød1	Ød2
964-006-11	1-6.5mm	±0.05mm	61	7	0.8
964-015-11	3-15mm	±0.05mm	133	16	2.7
964-030-11	15-30mm	±0.05mm	162	31	14.8
964-045-11	30-45mm	±0.05mm	163	46	29.8

DIGITAL WELDING GAUGE 970

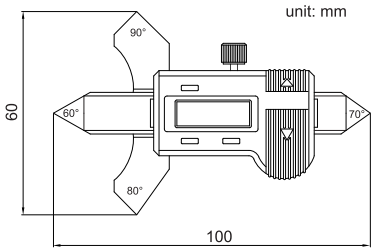

- Buttons: zero, mm/inch, on/off
- Made of stainless steel

Code	Range	Resolution	Accuracy	Application
970-010-11	0 - 10mm	0.01mm/0.0005"	±0.03mm	measure crown height
	0 - 20mm	0.01mm/0.0005"	±0.1mm	measure fillet weld throat size
	60°, 70°, 80°, 90°	—	±1°	measure angle

971 WELDING GAUGE

- Made of stainless steel
- Stain chrome plated reading surface

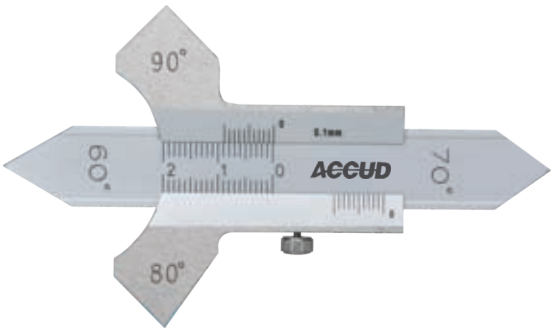

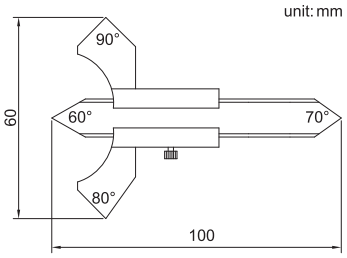

Code	Application	Range	Graduation	Accuracy
971-008-01	measure crown height	0 - 8mm	0.1mm	±0.1mm
	measure fillet weld throat size	0 - 20mm	0.1mm	±0.3mm
	measure angle	60°, 70°, 80°, 90°	—	±1°

972 WELDING GAUGE

- Double printing in front and reverse side
- Made of the stainless steel

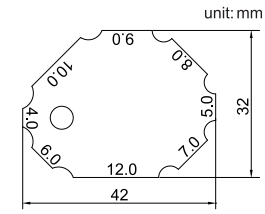

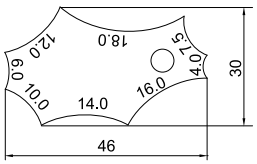

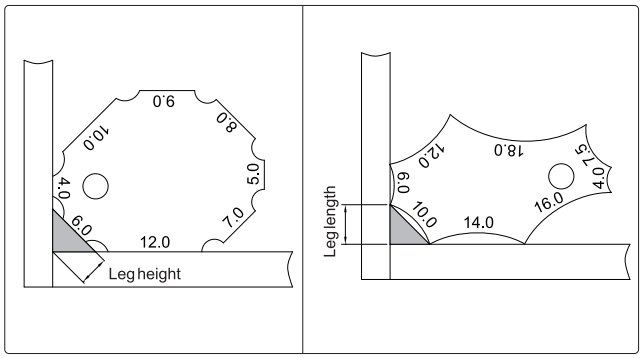

Code	Leg height	Leg length	Accuracy
972-012-01	4, 5, 6, 7, 8, 9, 10, 12mm	4, 6, 7.5, 10, 12, 14, 16, 18mm	±0.5mm

WELDING GAUGE 973

front side

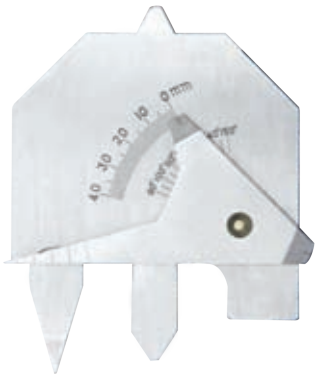

reverse side

- Made of stainless steel

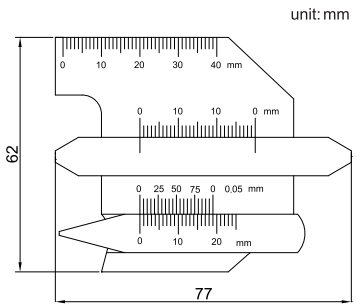

Code	Application	Range	Graduation	Accuracy
973-014-01	measure crown height	0 - 10mm	1mm	±0.5mm
	measure leg height	0 - 14mm	1mm	±0.5mm
	measure undercut depth	0 - 5mm	0.05mm	±0.05mm
	measure throat size	0 - 13mm	1mm	±0.5mm
	measure weld length	0 - 40mm	1mm	±1mm
	measure angle	90° - 150°	5°	±1°
	measure gap	0.5 - 5mm	1mm	±0.5mm
	measure length	0 - 40mm	1mm	±0.5mm

WELDING GAUGE 974

front side

reverse side

- Made of stainless steel
- Stain chrome plated surface

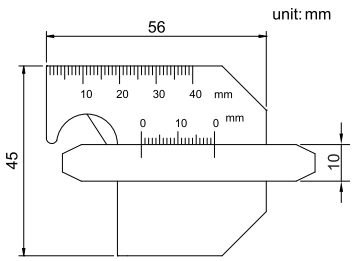

Code	Application	Range	Graduation	Accuracy
974-013-01	measure leg length	0 - 10mm	1mm	±0.1mm
	measure leg height	0 - 20mm	1mm	±0.5mm
	measure crown height	0 - 10mm	1mm	±0.1mm
	measure throat size	0 - 10mm	1mm	±0.1mm
	measure angle	0° - 60°	5°	±1°
	measure gap	1 - 3.5mm	0.5mm	±0.5mm
	measure length	0 - 40mm	1mm	±0.5mm

975 WELDING GAUGE

- Adjustable scale to compensate pointer wear
- Made of stainless steel

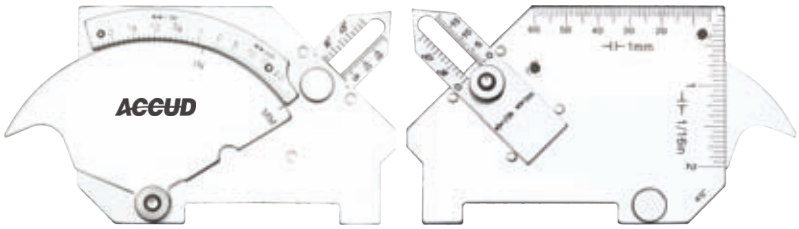

front side reverse side

Code	Range	Graduation	Accuracy	Application
975-025-01	0 - 25mm (0 - 1")	1mm (1/16")	±0.5mm	measure crown height
	0 - 25mm (0 - 1")	1mm (1/16")	±0.5mm	measure fillet weld leg height
	0 - 25mm (0 - 1")	1mm (1/16")	±0.5mm	measure misalignment
	0 - 2mm (0 - 1/8")	1mm (1/16")	±0.5mm	measure undercut depth
	0 - 20mm (0 - 3/4")	1mm (1/16")	±0.5mm	measure fillet weld throat size
	0 - 60°	5°	±1°	measure angle of preparation
	0 - 60mm (0-2")	1mm (1/16")	±0.5mm	measure length
	—	—	±1°	measure 45° angle

unit: mm

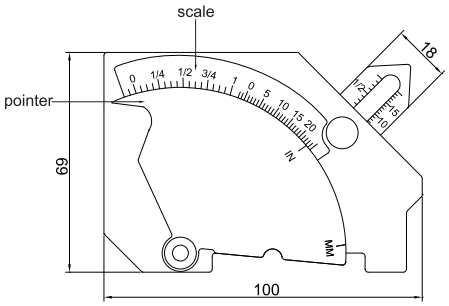

976 PIPE WELDING GAUGE

- Made of stainless steel

front side reverse side

unit: mm

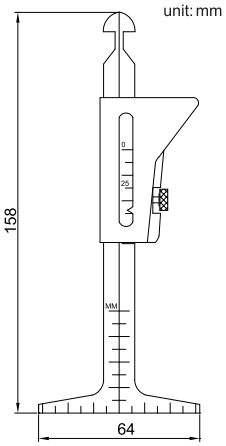

Code	Range	Graduation	Accuracy	Application
976-045-01	37.5°	—	±1°	measure bevel on end preparation
	0 - 45mm (0 – 1-3/4")	1mm (1/16")	±0.5mm	measure pipe wall thickness
	0 - 35mm (0 – 1-3/8")	1mm (1/32")	±0.5mm	measure internal misalignment
	1.6mm, 2.4mm	—	±0.1mm	measure fit-up gap
	0 - 35mm (0 – 1-3/8")	1mm (1/32")	±0.5mm	measure crown height
	0 - 60mm (0 – 2-3/8")	1mm (1/16")	±0.5mm	measure distance between two marking lines of socket weld
	0 - 30mm (0 – 1-1/4")	1mm (1/16")	±0.5mm	measure fillet weld length
	0 - 35mm (0 – 1-3/8")	1mm (1/32")	±0.5mm	measure fillet weld height

FILLET WELD GAUGE — SERIES 977

- Measure concave and convex weld sizes
- 7 blades are included
- Each blade measures two sizes of concave and convex weld
- Made of stainless steel

977-025-01

unit: mm

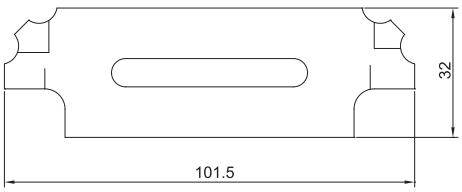

Code	Accuracy	Size
977-025-01	±0.5mm	3, 4, 5, 6, 8, 9, 10, 11, 12, 14, 16, 19, 22, 25mm
977-025-02	±0.02"	1/8", 3/16", 1/4", 5/16", 3/8",7/16", 1/2", 5/8",3/4", 7/8", 1"

WELDING GAUGE — 978

- Pointer can be locked for later reference
- Made of stainless steel

unit: mm

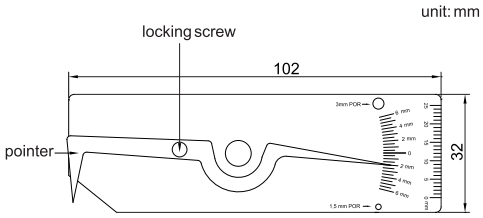

Code	Range	Graduation	Accuracy	Measurement
978-006-01	0 - 6mm	0.5mm	±0.5mm	undercut depth
	0 - 6mm	0.5mm	±0.5mm	crown height
	1.5mm, 3mm	—	±0.2mm	porosity size comparison
	25mm	1mm	—	amount of porosity per 25mm

966 WELDING GAUGE

- Made of stainless steel

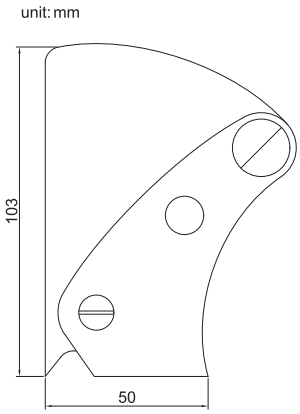

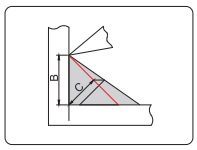

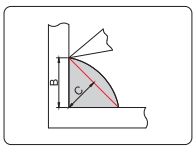

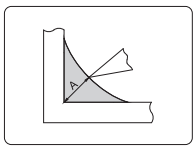

Code	Graduation	Accuracy
966-001-01	0.2mm	±0.3mm

968 DRILL ANGLE GAGE

- Check drills with angle 60°, 70°, 90°, 118°, 125°, 135°, 150° or 160°
- Made of stainless steel

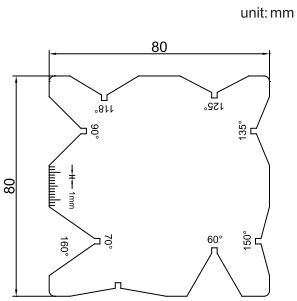

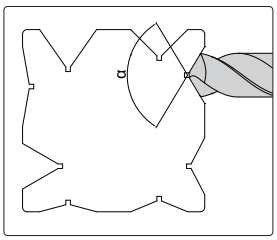

Code	Accuracy
968-001-01	±0.5°

WELDING GAUGE 979

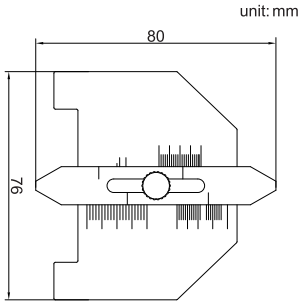

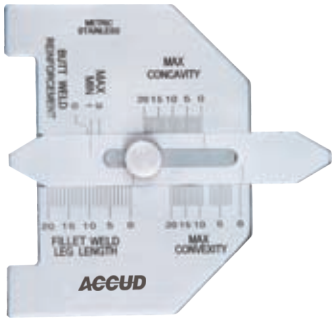

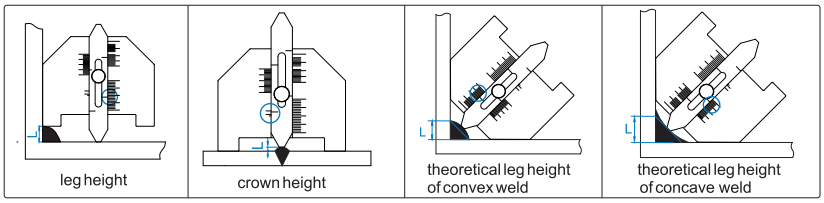

Code	Range	Graduation	Accuracy	Measurement
979-020-01	0-20mm	1mm	±0.5mm	leg height
	0-3mm	—	±0.5mm	crown height
	0-20mm	1mm	±0.5mm	theoretical leg height of convex weld
	0-20mm	1mm	±0.5mm	theoretical leg height of concave

FILLET WELDING GAUGE 969

- Calculating card is included
- Made of stainless steel

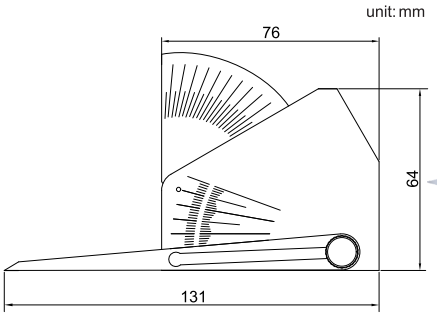

calculating card (included)

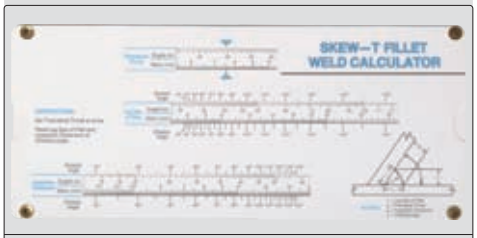

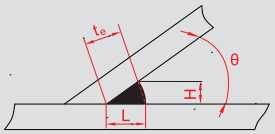

measure weld seam height **H** and angle **θ**, calculate theoretical throat size **t_e** and leg height **L** according to **H** and **θ**.

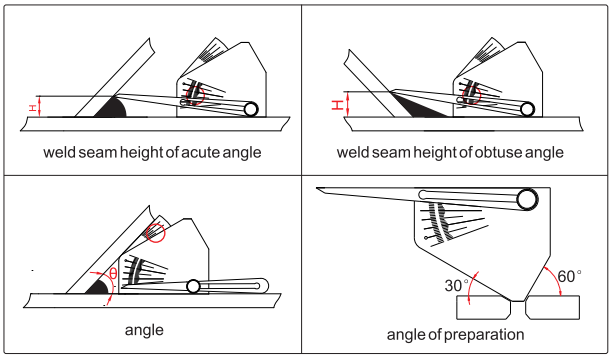

Code	Range	Graduation	Accuracy	Measurement
969-050-01	0 - 50mm / 0-2"	2mm/.050"	±1mm	weld seam height **H**
	30° - 90°	2.5°	±1°	angle **θ**
	—	—	±0.5°	90° angle

967 CHAMFER GAUGE

- To measure internal and external chamfers
- Made of stainless steel

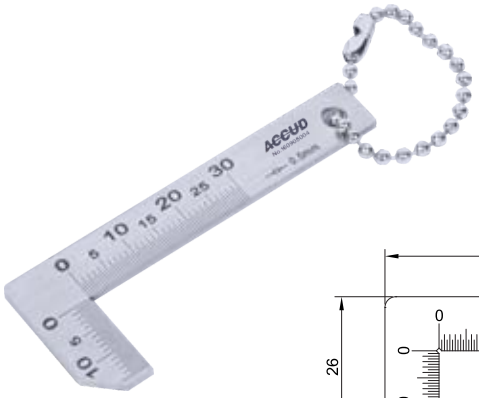

unit: mm

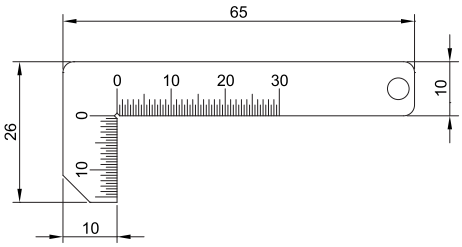

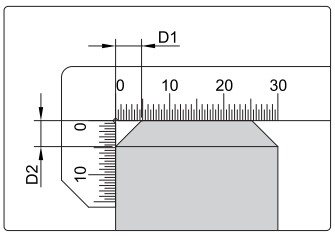

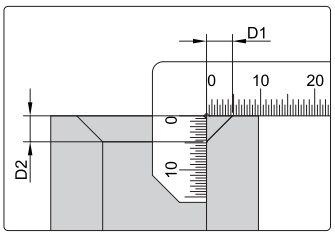

Code	Graduation	Accuracy
967-001-11	0.5mm	±0.25mm

160 CHAMFER GAUGE

- Measure 45° chamfer dimension
- Graduation 0.02mm
- Made of stainless steel
- Satin chrome plated reading surface

unit: mm

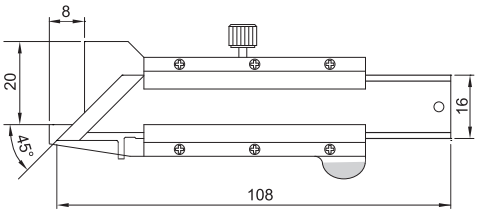

measure 45° chamfer dimension

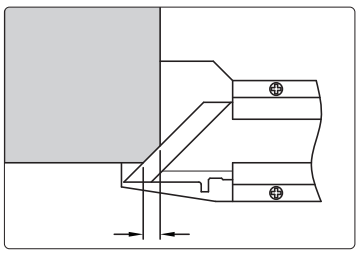

Code	Range	Accuracy
160-001-11	0-6mm	±0.06mm

DIGITAL CHAMFER GAUGE 163

- Measure 45º chamfer dimension
- Resolution: 0.01mm/0.0005"
- Buttons: on/off, zero, mm/inch
- Automatic power on/off
- Data output
- Made of stainless steel

unit: mm

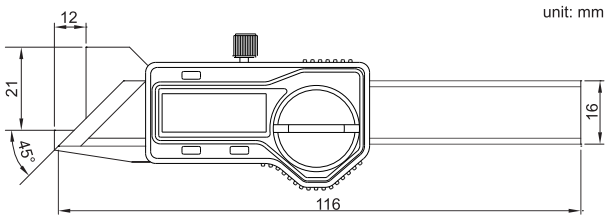

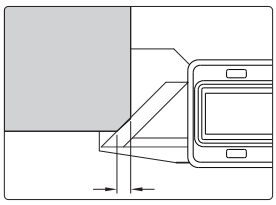

Code	Range	Accuracy
163-006-11	0-8mm/0-0.32"	±0.06mm

DIGITAL CHAMFER GAUGE SERIES 164

164-001-11

164-002-11

- Resolution: 0.01mm
- Made of stainless steel

unit: mm

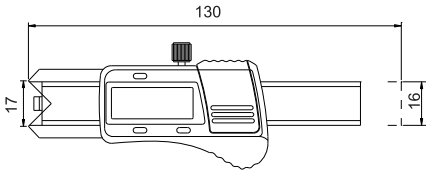

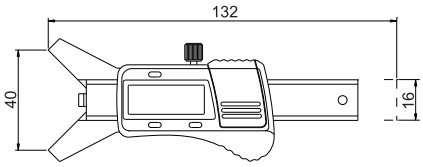

Measure chamfer radius

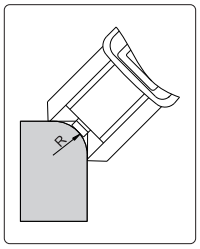

Measure leg length of 45° chamfer

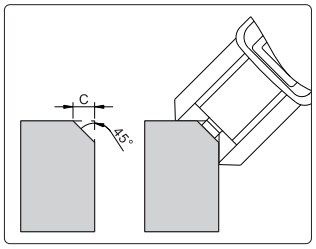

Code	Range of leg length (C)	Range of radius (R)	Accuracy
164-001-11	0-6mm	0-15mm	±0.05mm
164-002-11	0-18mm	0-30mm	±0.05mm

195 DIGITAL KEYWAY GAUGE

- Measure the depth of keyway
- Resolution: 0.01mm/0.0005"
- Buttons: on/off, zero, mm/inch
- Automatic power on/off
- Data output
- Made of stainless steel

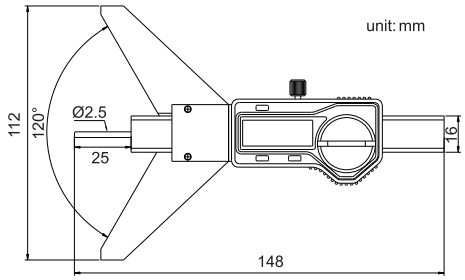

step1: set zero

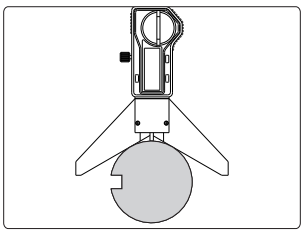

step2: measure depth of keyway

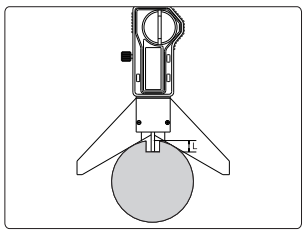

Code	Range	Accuracy
195-002-11	0-50mm/0-2"	±0.03mm

965 DRILL POINT GAUGE

- For twist drills with 118° angle, to check if the center of tip is concentric with the drill body
- Made of stainless steel

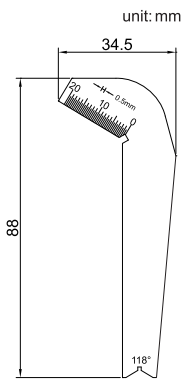

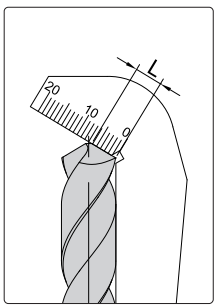

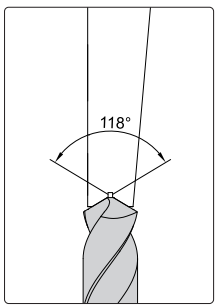

Code	Accuracy	
	Angle	Length
965-005-01	±0.5°	±0.5mm

INSIDE CALIPER SERIES 981

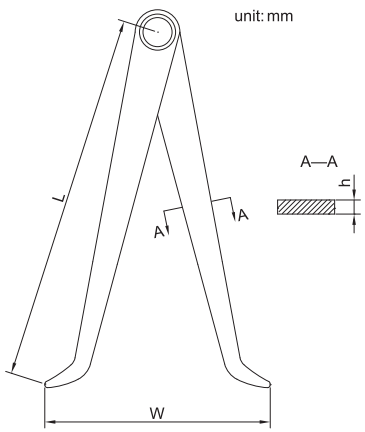

981-006-01

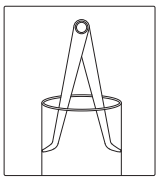

- Made of carbon steel

Code	Size(L)	Range(W)	h
981-006-01	150mm	15 - 150mm	2mm
981-008-01	200mm	15 - 200mm	2mm
981-010-01	250mm	15 - 250mm	3mm
981-012-01	300mm	15 - 300mm	3mm

INSIDE SPRING CALIPER SERIES 982

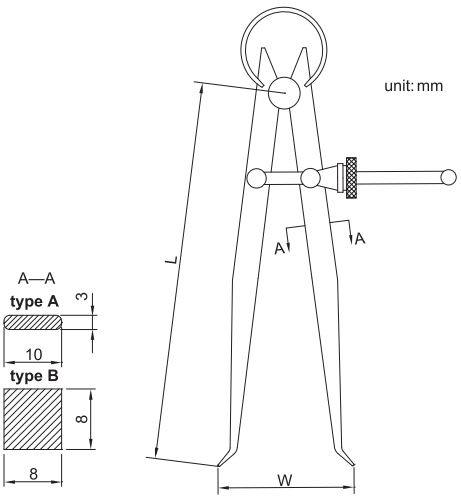

982-006-01

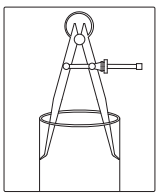

- Made of carbon steel

Code	Size(L)	Range(W)	Type
982-005-01	125mm	15 - 115mm	A
982-006-01	150mm	15 - 140mm	A
982-008-01	200mm	18 - 190mm	A
982-010-01	250mm	20 - 240mm	A
982-012-01	300mm	20 - 290mm	A
982-016-01	400mm	20 - 390mm	B
982-020-01	500mm	25 - 490mm	B
982-024-01	600mm	25 - 590mm	B

SERIES 983 OUTSIDE CALIPER

- Made of carbon steel

983-006-01

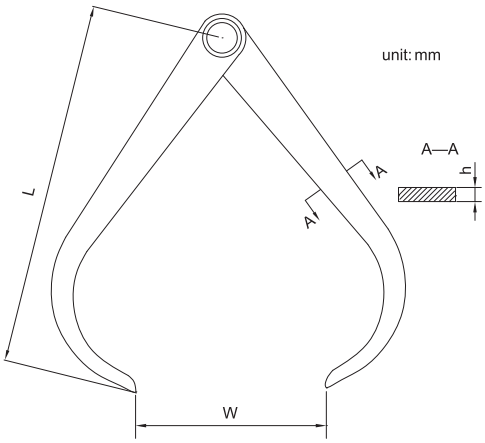

Code	Size(L)	Range(W)	h
983-006-01	150mm	0 - 150mm	2mm
983-008-01	200mm	0 - 200mm	2mm
983-010-01	250mm	0 - 250mm	3mm
983-012-01	300mm	0 - 300mm	3mm

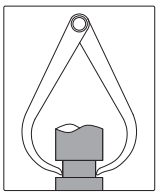

SERIES 984 OUTSIDE SPRING CALIPER

- Made of carbon steel

984-005-01

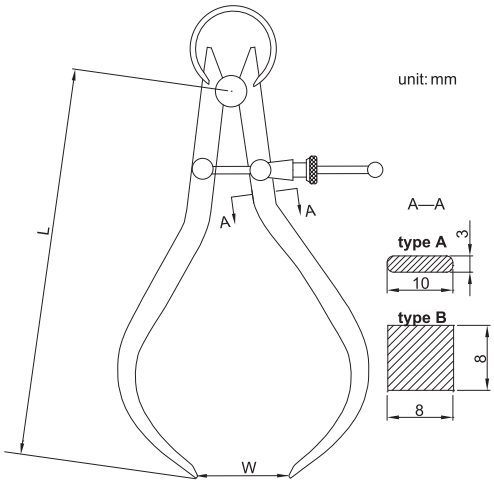

Code	Size(L)	Range(W)	Type
984-005-01	125mm	0 - 115mm	A
984-006-01	150mm	0 - 140mm	A
984-008-01	200mm	0 - 190mm	A
984-010-01	250mm	0 - 240mm	A
984-012-01	300mm	0 - 290mm	A
984-016-01	400mm	0 - 390mm	B
984-020-01	500mm	0 - 490mm	B
984-024-01	600mm	0 - 590mm	B

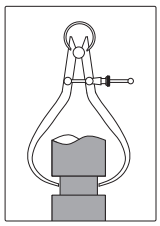

SPRING DIVIDER SERIES 985

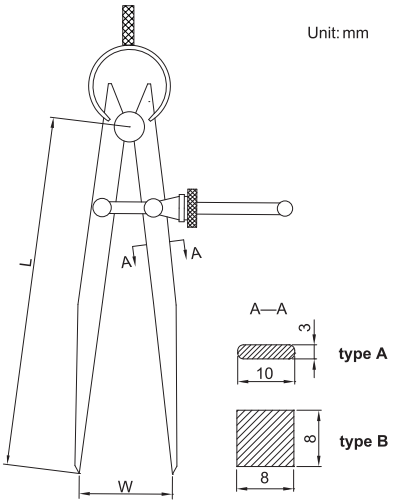

985-005-01

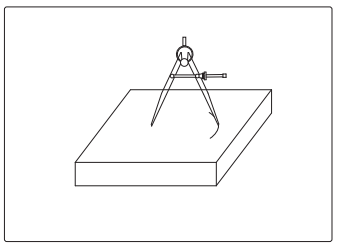

- Made of carbon steel
- Hardened points

Code	Size(L)	Range(W)	Type
985-005-01	125mm	0 - 115mm	A
985-006-01	150mm	0 - 140mm	A
985-008-01	200mm	0 - 190mm	A
985-010-01	250mm	0 - 240mm	A
985-012-01	300mm	0 - 290mm	B
985-016-01	400mm	0 - 390mm	B
985-020-01	500mm	0 - 490mm	B
985-024-01	600mm	0 - 590mm	B

DIVIDER SERIES 986

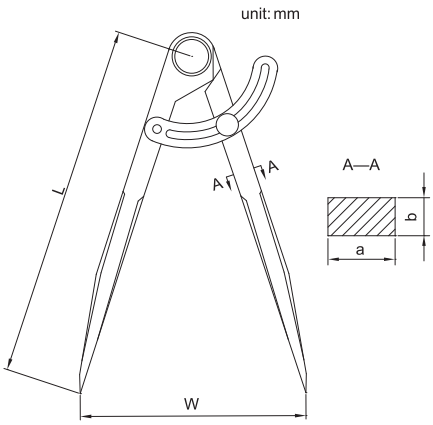

986-005-01

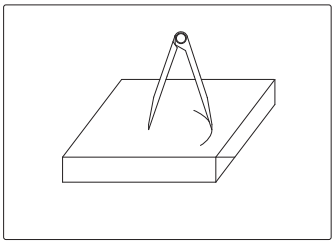

- Made of carbon steel
- Hardened points

Code	Size(L)	Range(W)	a	b
986-005-01	125mm	0 - 115mm	8.5	7
986-006-01	150mm	0 - 140mm	8.5	7
986-008-01	200mm	0 - 190mm	10	7
986-010-01	250mm	0 - 240mm	11	7
986-012-01	300mm	0 - 290mm	12	7
986-016-01	400mm	0 - 390mm	12	7
986-020-01	500mm	0 - 490mm	12	7
986-024-01	600mm	0 - 590mm	12	7
986-032-01	800mm	0 - 790mm	16	11
986-040-01	1000mm	0 - 990mm	16	11

SERIES 990 STEEL RULE

- Graduation: 0.5mm, 1mm, 1/64", 1/32", 1/16"
- Semi-flexible rules
- Made of stainless steel

990-006-11

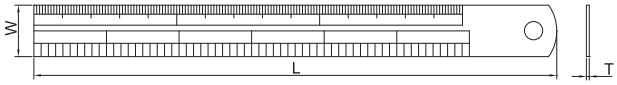

Code	Range	Accuracy	T	L	W
990-006-11	150mm/6"	±0.08mm	1mm	170mm	18mm
990-008-11	200mm/8"	±0.08mm	1mm	220mm	18mm
990-012-11	300mm/12"	±0.11mm	1mm	330mm	25mm
990-020-11	500mm/20"	±0.14mm	1mm	530mm	30mm
990-040-11	1000mm/40"	±0.24mm	1.5mm	1040mm	32mm

SERIES 989 MEASURING TAPE

- Matt Nylon coating tape, wear resistance

989-005-01

unit: mm

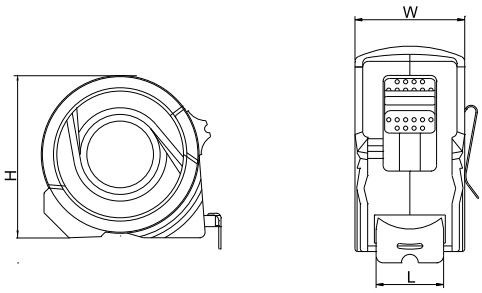

Code	Range	Graduation	Width of tape L	W	H
989-003-01	0-3m	1mm	16mm	33mm	60mm
989-005-01	0-5m	1mm	19mm	33mm	68mm

MARKING GAUGE SERIES 992

- Made of stainless steel
- Stain chrome finish

992-010-01

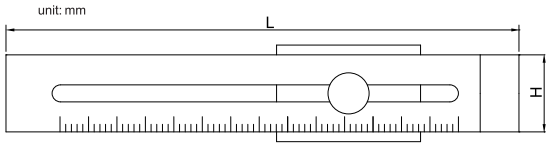

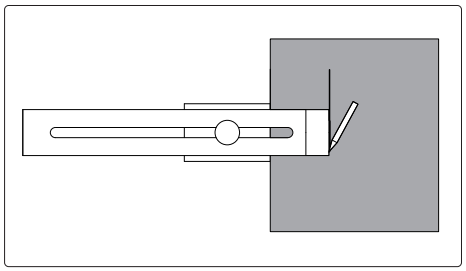

Code	Range	Graduation	Accuracy	H	L
992-008-01	0 - 200mm	0.1mm	±0.1mm	40mm	250mm
992-010-01	0 - 250mm	0.1mm	±0.1mm	40mm	300mm
992-012-01	0 - 300mm	0.1mm	±0.1mm	40mm	350mm

CENTER MARKING GAUGE SERIES 993

- Find the center of round plates and shafts
- Made of stainless steel
- Stain chrome plated

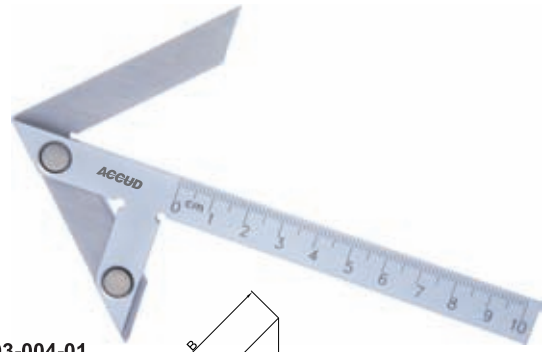

993-004-01

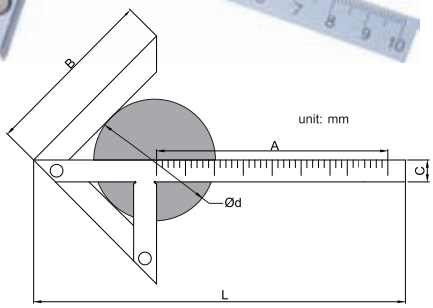

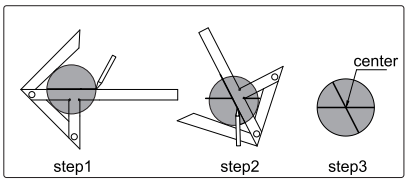

Code	Size (AxB)	Diameter(Ød)	Accuracy	C	L
993-004-01	100x70mm	4 - 90mm	±0.15mm	12	153
993-006-01	150x130mm	4 - 190mm	±0.15mm	15	245
993-008-01	200x150mm	6 - 220mm	±0.15mm	15	310

902 T-SHAPE MARKING GAUGE

- Made of stainless steel
- Satin chrome plated reading surface

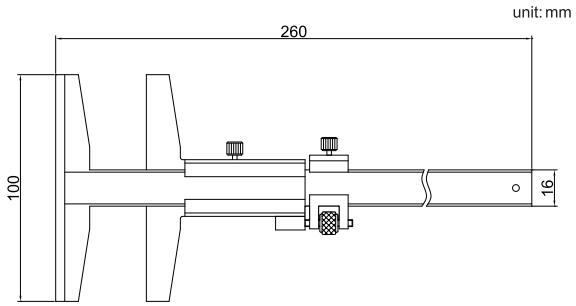

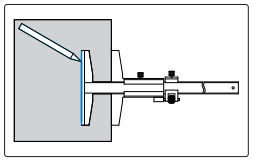

Code	Range	Graduation	Accuracy
902-006-51	0-150mm	0.05mm	±0.05mm

901 SCRIBER CALIPER

- Graduation: 0.1mm
- Made of stainless steel
- Satin chrome plated reading surface
- Hardened scriber tips

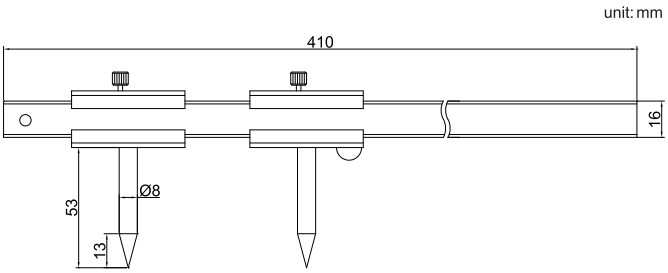

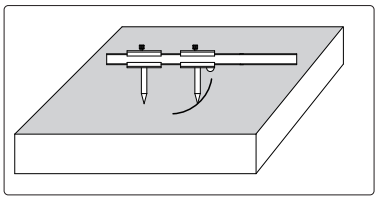

Code	Range	Accuracy
901-012-11	51-300mm	±0.1mm

SCRIBER 995

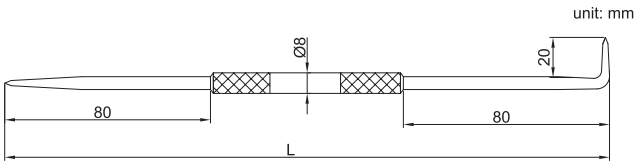

- Nickel plated

Code	Tips	L
995-009-01	hardened tips	250mm

SCRIBER 995

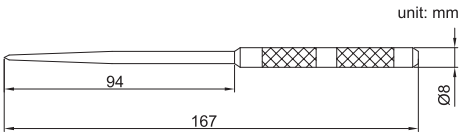

- Nickel plated

Code	Tips	L
995-007-01	hardened tips	167mm

SERIES 996 DIGITAL HORIZONTAL SCALE

Type A

- Resolution: 0.01mm/0.0005"
- Buttons: on/off, zero, mm/inch
- Automatic power off
- Data output
- Made of stainless steel
- Supplied with bracket
- Optional accessory: SPC cable

996-006-11

unit: mm

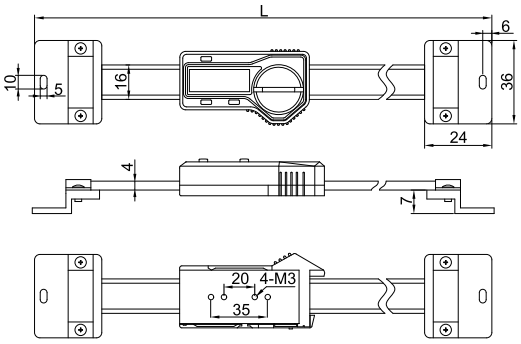

Type B

- Resolution: 0.01mm/0.0005"
- Absolute and incremental measurement
- Data output
- Made of stainless steel
- Supplied with bracket

996-020-11

unit: mm

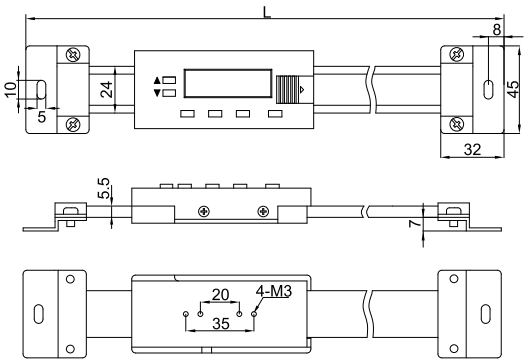

Code	Range	Accuracy	Type	L
996-004-11	100mm	±0.03mm	A	209mm
996-006-11	150mm	±0.03mm	A	259mm
996-008-11	200mm	±0.03mm	A	310mm
996-012-11	300mm	±0.04mm	A	444mm
996-020-11	500mm	±0.05mm	B	682mm
996-024-11	600mm	±0.08mm	B	790mm
996-032-11	800mm	±0.10mm	B	990mm
996-040-11	1000mm	±0.10mm	B	1240mm

bracket

unit: mm

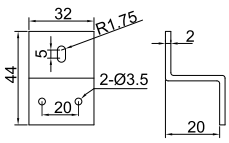

DIGITAL VERTICAL SCALE

SERIES 997

- Resolution: 0.01mm/0.0005"
- Data output
- Made of stainless steel
- Supplied with bracket

997-012-11

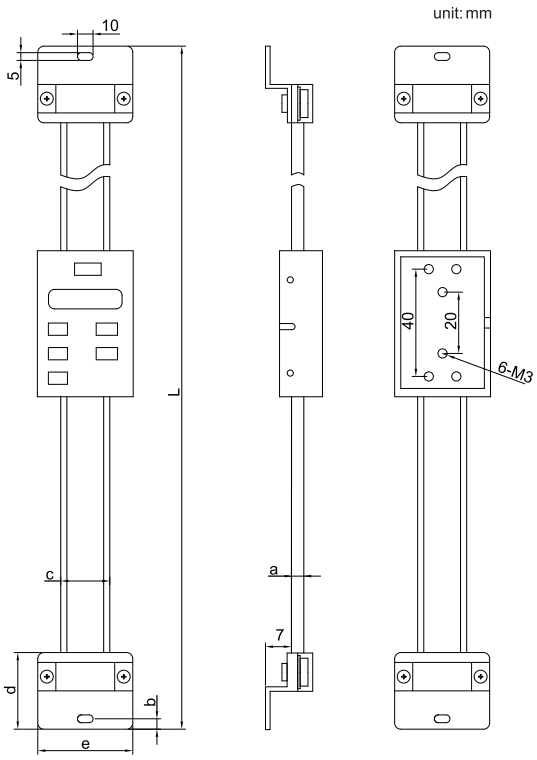

bracket

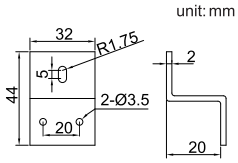

Code	Range	Accuracy	a	b	c	d	e	L
997-004-11	100mm	±0.03mm	4	6	20	40	24	209mm
997-006-11	150mm	±0.03mm	4	6	20	40	24	259mm
997-008-11	200mm	±0.03mm	4	6	20	40	24	310mm
997-012-11	300mm	±0.04mm	4	6	20	40	24	444mm
997-020-11	500mm	±0.05mm	5.5	8	24	40	32	682mm
997-024-11	600mm	±0.08mm	5.5	8	24	51	32	790mm
997-032-11	800mm	±0.10mm	5.5	8	24	51	32	990mm
997-040-11	1000mm	±0.10mm	5.5	8	24	51	40	1240mm

998 VERNIER STEP GAUGE

- Measure the height difference of two surface
- Resolution: 0.05mm

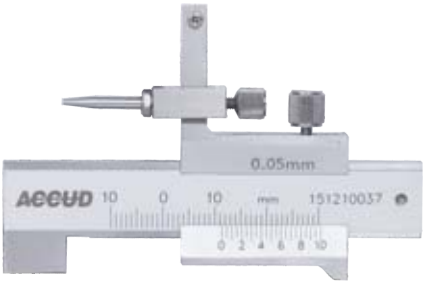

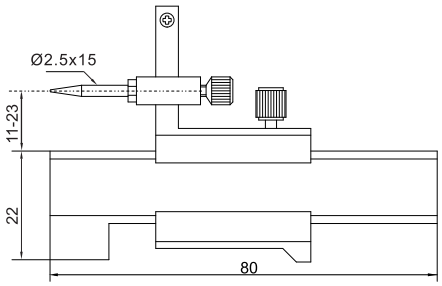

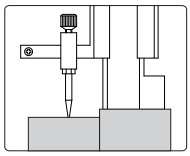

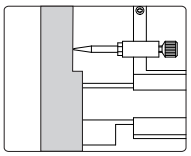

Code	Range	Accuracy
998-010-11	-10~ +10mm	±0.05mm

999 DIGITAL STEP GAUGE

- Measure the height difference of two surface
- Resolution: 0.01mm

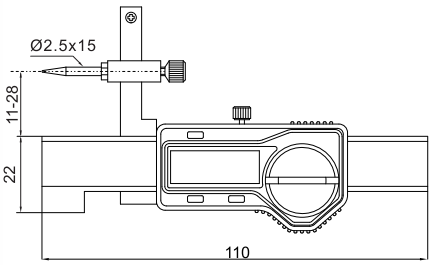

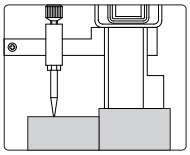

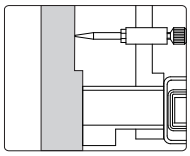

Code	Range	Accuracy
999-010-11	-10~ +10mm	±0.05mm

437 STEP AND GAP GAUGE

- Measure step height and gap width
- Resolution: 0.01mm/0.0005"
- Buttons: on/off, zero, mm/inch
- Automatic power on/off
- Data output
- Made of stainless steel
- Supplied with zero setting block

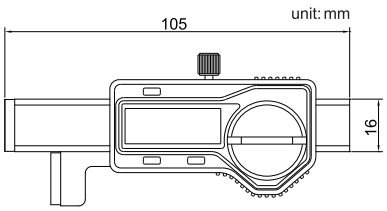

zero setting block

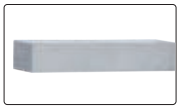

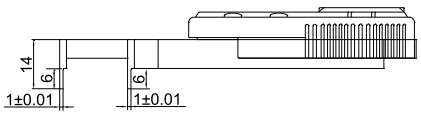

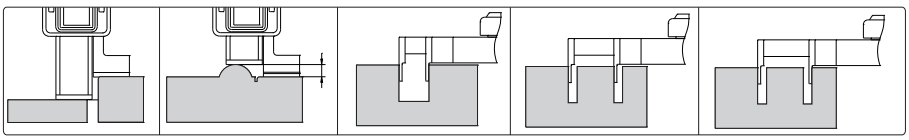

Code	Range	Accuracy
437-001-11	0-12.7mm/0-0.5"	±0.03mm

GRANITE SURFACE PLATE

SERIES 611

611-032-00

- Made of fine-grained granite
- With calibration certificate
- Customized size can be ordered

Grade 00

Code	Size(LxWxH)	Flatness	Weight(Kg)
611-032-00	300x200x60mm	2.7μm	11
611-042-00	400x250x60mm	2.9μm	18
611-044-00	400x400x60mm	3.1μm	29
611-053-00	500x315x70mm	3.2μm	33
611-064-00	630x400x80mm	3.5μm	60
611-066-00	630x630x100mm	3.8μm	119
611-085-00	800x500x100mm	3.9μm	120
611-106-00	1000x630x140mm	4.4μm	265
611-101-00	1000x1000x150mm	4.8μm	450
611-121-00	1200x800x160mm	4.9μm	461
611-161-00	1600x1000x180mm	5.8μm	864
611-201-00	2000x1000x220mm	6.5μm	1320
611-215-00	2000x1500x250mm	7.0μm	2250

Grade 0

Code	Size(LxWxH)	Flatness	Weight(Kg)
611-032-10	300x200x60mm	5.4μm	11
611-042-10	400x250x60mm	5.9μm	18
611-044-10	400x400x60mm	6.3μm	29
611-053-10	500x315x70mm	6.4μm	33
611-064-10	630x400x80mm	7.0μm	60
611-066-10	630x630x100mm	7.6μm	119
611-085-10	800x500x100mm	7.8μm	120
611-106-10	1000x630x140mm	8.7μm	265
611-101-10	1000x1000x150mm	9.7μm	450
611-121-10	1200x800x160mm	9.8μm	461
611-161-10	1600x1000x180mm	11.5μm	864
611-201-10	2000x1000x220mm	12.9μm	1320
611-215-10	2000x1500x250mm	14.0μm	2250

STAND FOR GRANITE SURFACE PLATE

SERIES 621

621-064-01

- For medium size granite surface plates
- Adjusting range of jacks: 25mm
- One foot on the bottom is adjustable
- The height can be made under customer requirement

unit: mm

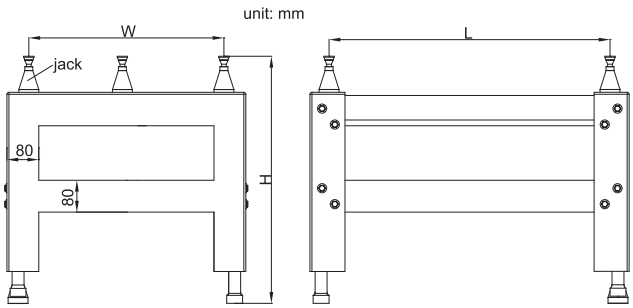

Code	L	W	H	For granite surface plate
621-064-01	352	224	640-660	630x400x80mm
621-066-01	352	352	675-695	630x630x100mm
621-085-01	448	280	665-685	800x500x100mm
621-106-01	560	352	630-650	1000x630x140mm
621-101-01	560	560	630-650	1000x1000x150mm
621-121-01	672	448	630-650	1200x800x160mm
621-161-01	896	560	585-605	1600x1000x180mm

SERIES 625 JACK SET FOR GRANITE SURFACE PLATE

- 5 jacks per set
- Adjustable height
- For large granite surface plates:
  2000x1000mm
  2000x1500mm
  2500x1500mm
  3000x2000mm

unit: mm

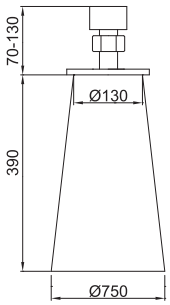

Code
625-000-00

SERIES 633 MAGNETIC V-BLOCK

- Hold cylindrical workpiece for inspection and machining

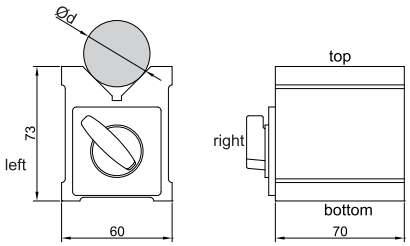

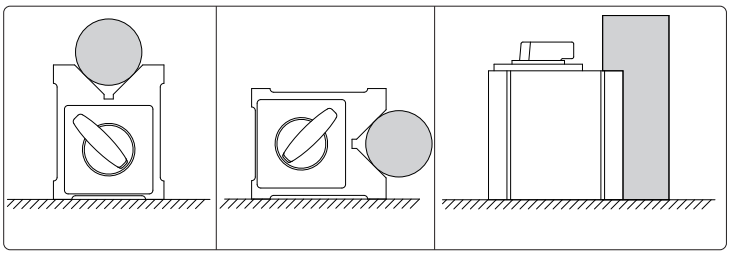

Code	For shaft range(Ød)	Magnetic force	Top and bottom, left and right parallelism	V-grooves and back side squareness
633-044-01	6 - 44mm	56kgf	10μm	10μm

MAGNETIC V-BLOCK SERIES 634

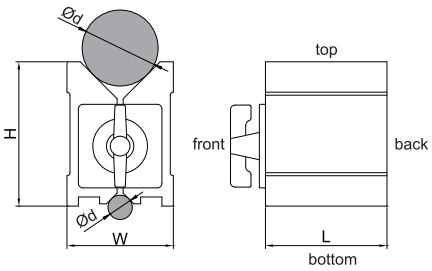

634-067-01

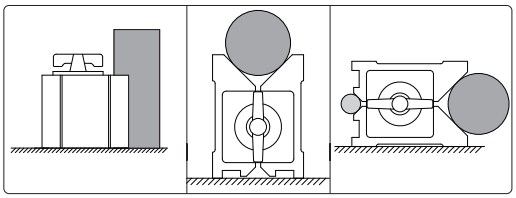

- Hold cylindrical workpiece for inspection and machining
- Top groove for large shafts
- Bottom grooves for small shafts

Code	Size(LxWxH)	For shaft range (Ød)	Magnetic force	V-grooves and back side squareness	Top side and bottom side parallelism
634-067-01	80x70x95mm	6 - 67mm	64kgf	10μm	10μm
634-067-02	100x70x95mm	6 - 67mm	80kgf	10μm	10μm
634-067-03	120x70x95mm	6 - 67mm	96kgf	10μm	10μm

MAGNETIC V–BLOCK SET SERIES 635

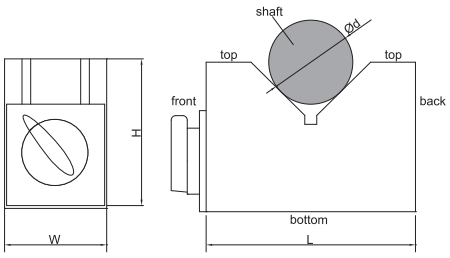

635-150-01

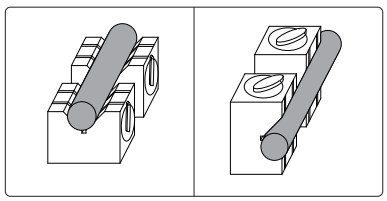

- Hold cylindrical workpieces for inspection, not suitable for machining due to weak magnetic force
- Two V-blocks per set

Code	Size(LxWxH)	Range of shafts (Ød)	Magnetic force	Parallelism of V groove to bottom and back sides	Height difference of a matched pair
635-070-01	70x40x50mm	6 - 46mm	8kgf	10μm	10μm
635-150-01	150x50x100mm	6 - 125mm	14kgf	10μm	10μm

SERIES 631 GRANITE V-BLOCK SET

- Supplied a pair, for holding long cylindrical workpiece

631-075-01

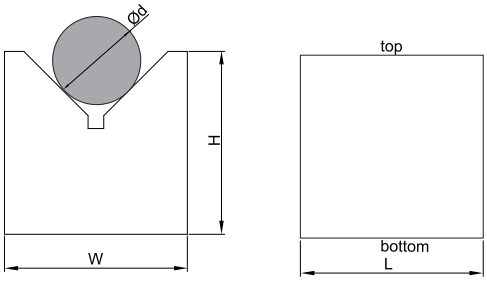

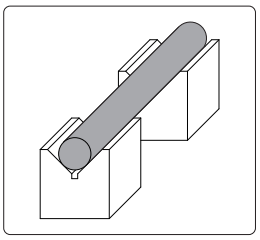

Code	Size(LxWxH)	For shaft range(Ød)	Parallelism between top and bottom, left and right	Height difference between a pair
631-075-01	50x70x70mm	6 - 75mm	5μm	5μm
631-099-01	50x100x70mm	6 - 99mm	5μm	5μm

SERIES 632 V-BLOCK SET

- Two V blocks per set
- Made of hardened tool steel

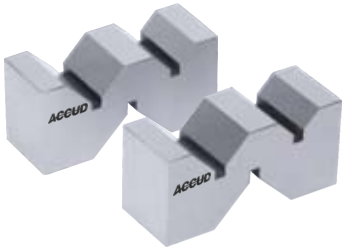

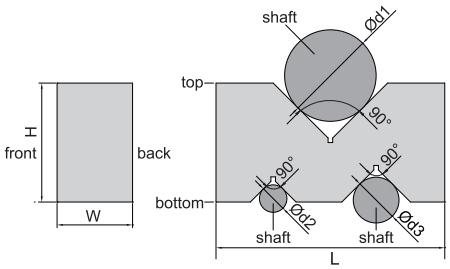

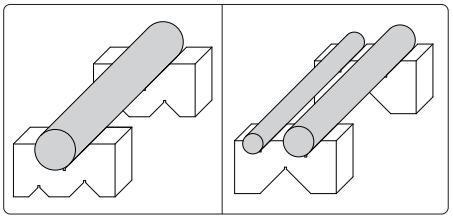

Code	Size (LxWxH)	Range of shafts(Ød1)	Range of shafts(Ød2)	Range of shafts(Ød3)	Parallelism of V grooves to top and bottom sides	Squareness of V grooves to front and back sides	Height difference of a matched pair
632-002-01	50x19x24	3 - 32	3 - 16	3 - 22	5μm	5μm	5μm
632-003-01	75x24x35	3 - 50	3 - 20	3 - 32	5μm	5μm	5μm
632-004-01	100x33x52	3 - 68	3 - 26	3 - 40	5μm	5μm	5μm
632-006-01	150x50x80	6 - 100	5 - 40	5 - 60	5μm	5μm	5μm

V-BLOCK SET SERIES 636

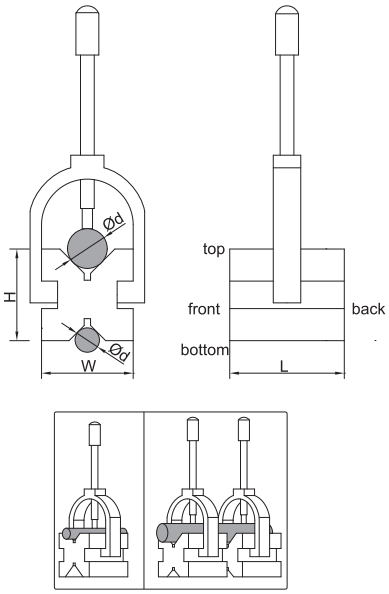

636-045-01

- Hold cylindrical workpieces for inspection and machining
- Two V-blocks per set
- V groove on the top for large shafts
- V groove on the bottom for small shafts

Code	Size(LxWxH)	For shaft range(Ød)	V grooves to top and bottom sides parallelism	V grooves to front and back sides squareness	Height difference of a matched pair
636-045-01	45x41x35mm	5-40mm	5μm	5μm	5μm
636-070-01	70x63x44mm	7-60mm	5μm	5μm	5μm
636-125-01	125x90x70mm	7-90mm	5μm	5μm	5μm

V-BLOCK SET SERIES 637

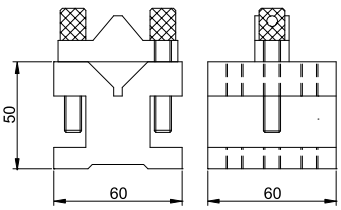

637-035-01

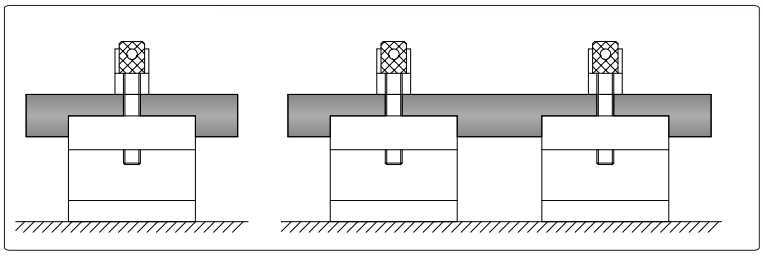

- Hold cylindrical workpieces for inspection and machining
- Two V-blocks per set
- V groove on the top for large shafts

Code	Size(LxWxH)	For shaft range(Ød)	V grooves to top and bottom sides parallelism	V grooves to front and back sides squareness	Height difference of a matched pair
637-035-01	35x35x30mm	3-16mm	5μm	5μm	5μm
637-060-01	60x60x50mm	5-34mm	5μm	5μm	5μm
637-105-01	105x105x78mm	8-66mm	5μm	5μm	5μm

638 V-BLOCK SET

- Hold cylindrical or rectangular workpieces for inspection and machining
- Two V-blocks per set
- Hardened to HRC60±2
- Applicable for cylinder with diameter (Ød): 5 - 50mm
- Applicable for rectangular workpieces with thickness: ≤35mm

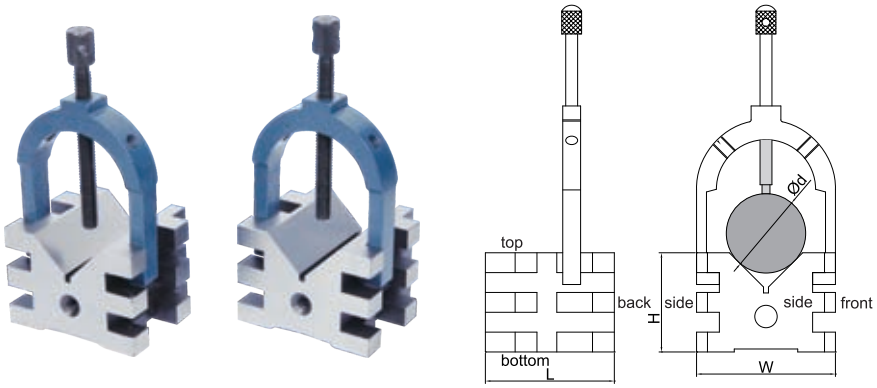

Application

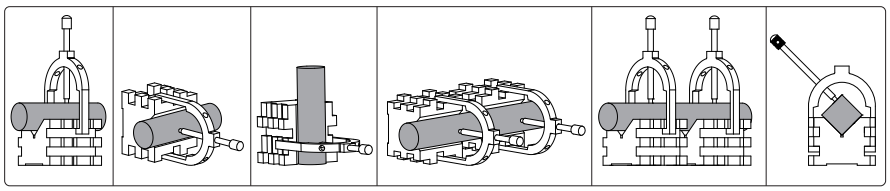

Code	Size (LxWxH)	Parallelism of V groove to top and bottom sides	Squareness of V groove to front and back sides	Height difference of a matched pair
638-070-01	60x70x50mm	8μm	8μm	8μm

640 V-BLOCK SET

- Hold cylindrical workpieces for inspection and machining
- Two V-blocks per set
- Side lie-down use is possible
- Hardened to HRC60±2
- V groove on the top for large shafts
- V groove on the bottom for small shafts

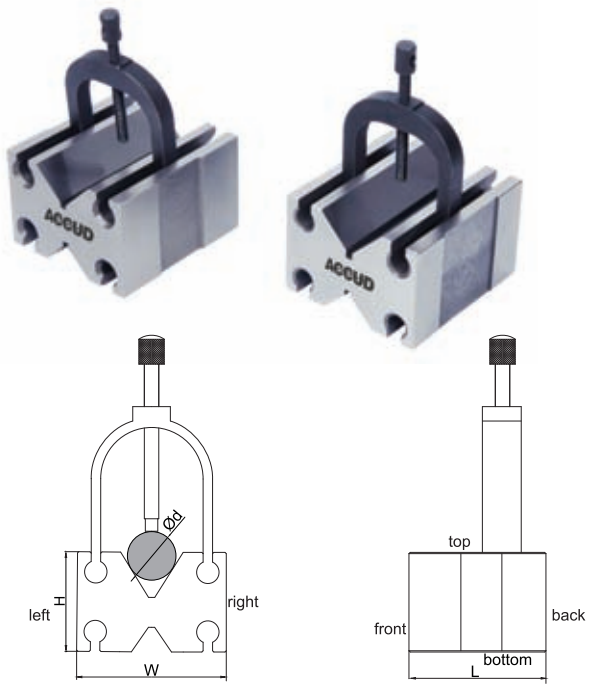

Code	Size (LxWxH)	Range of shafts (Ød)	Parallelism of both V grooves to top, bottom, left, right sides	Squareness of both V grooves to front and back sides	Height difference of a matched pair
640-001-01	65x70x45mm	4 -35mm	5μm	5μm	5μm

V-BLOCK 639

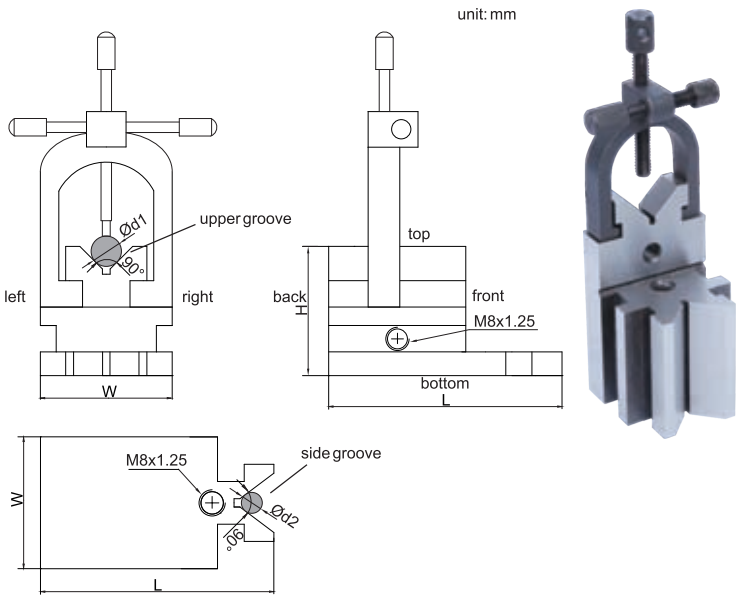

- Hold cylindrical workpieces for inspection and machining
- Hardened to HRC60±2

Code	Size (LxWxH)	Range of shafts (Ød1 and Ød2)	Parallelism of upper groove to bottom, left and right sides	Squareness of upper groove to back side	Parallelism of side groove to back side
639-090-01	90x48x48mm	5-33mm	5μm	5μm	5μm

PARALLEL SET 641

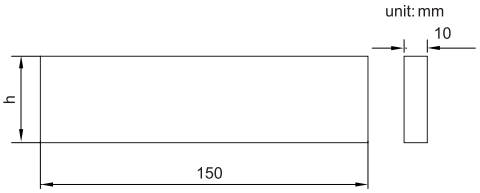

- Parallelism between top and bottom: 5μm
- Height difference of a matched pair: 5μm
- Hardened to HRC55-60

(mm)

Code	Parallels per set	Length	Thickness	Height(h)
641-014-01	14 pairs	150	10	14, 16, 18, 20, 22, 24, 26, 28, 30, 32, 35, 40, 45, 50

SERIES 571 ANGLE GAUGE BLOCK SET

- For angle set-up in tooling, production and inspection
- Hardness HRC55

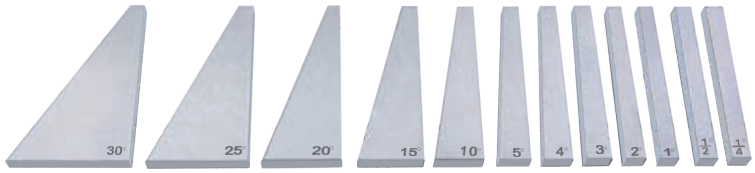

571-012-01

Code	Blocks per set	Accuracy	Sharp	Angle
571-010-02	10	±20"	triangle	1°, 2°, 3°, 4°, 5°, 10°, 15°, 20°,25° , 30°
571-012-01	12	±20"	triangle	1/4°, 1/2°, 1°, 2°, 3°, 4°, 5°, 10°, 15°, 20°, 25°, 30°

646 UNIVERSAL ANGLE PLATE SET

- For angle set-up in tooling, production and inspection
- Hardness HRC55

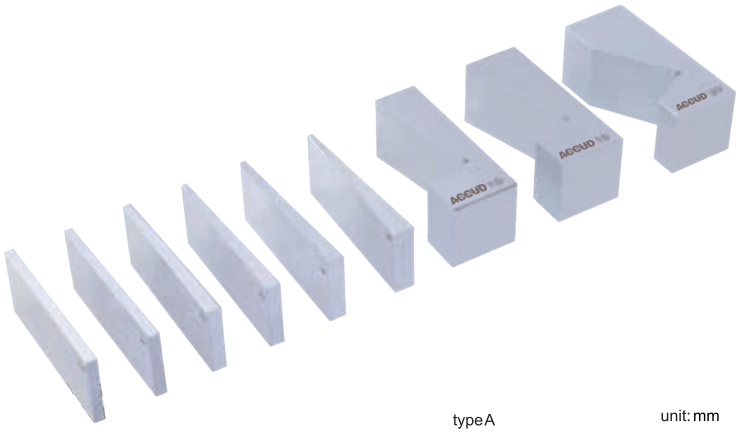

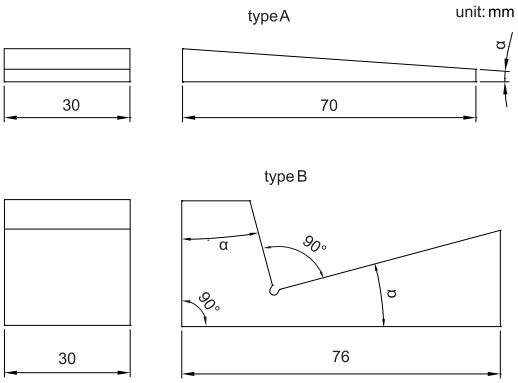

Code	Quantity	Angle α	Type	Accuracy
646-009-01	9pcs	½°, 1°, 2°, 3°, 4°, 5°	type A	±1'
		10°, 15°, 30°	type B	

SINE BAR SERIES 651

651-005-01

unit: mm

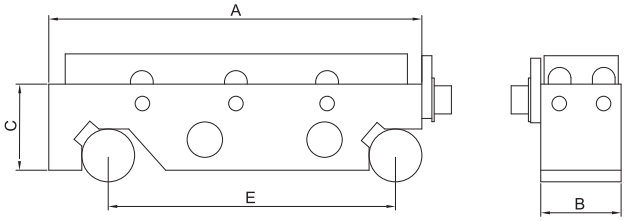

Code	Roller distance (E)	Table size (AxB)	Accuracy of α at 30°	C
651-005-01	100mm	130x25mm	±8"	25mm
651-005-02	100mm	130x83mm	±16"	30mm
651-010-01	200mm	250x40mm	±8"	40mm
651-010-02	200mm	250x85mm	±16"	40mm

PRECISION VISE SERIES 652

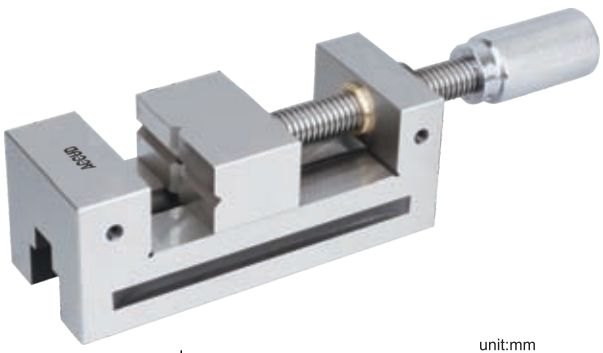

- Parallelism: 5μm/100mm
- Squareness: 5μm/100mm
- Made of alloy steel
- Hardness HRC56-58

unit:mm

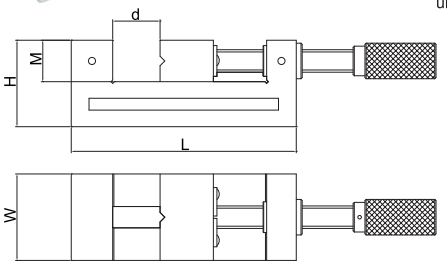

Code	Jaw opening(d)	Jaw width(W)	Overall length(L)	H	M
652-073-01	73mm	63mm	176mm	63	30
652-076-01	76mm	73mm	190mm	73	35
652-120-01	120mm	98mm	255mm	82	40

SERIES 653 PRECISION VISE

- Made of hardened alloy steel
- Parallelism and squareness between A, B, C, D, E and F: 5μm/100mm
- Hardness HRC56-58

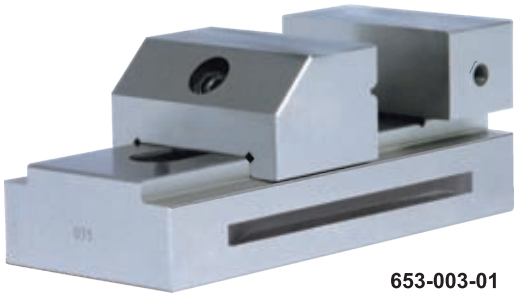

653-003-01

unit: mm

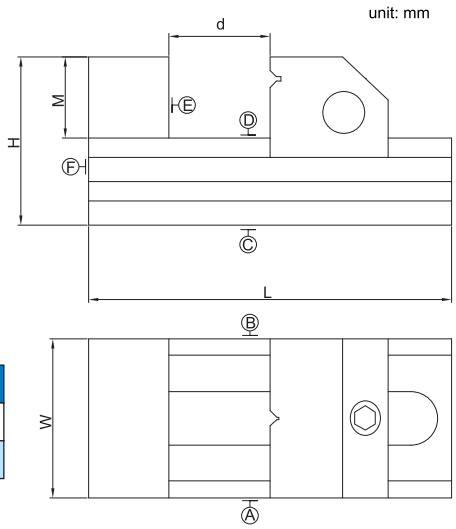

Code	Jaw opening(d)	Jaw width(W)	Overall length(L)	H	M
653-003-01	80mm	50mm	150mm	53	32
653-005-01	100mm	70mm	190mm	70	35

657 PRECISION SINE VISE

- Parallelism: 3μm/100mm
- Squareness: 5μm/100mm
- Accuracy of angle: ±20"
- Made of SKS tool steel, subzero treatment
- Hardness HRC58-60

unit: mm

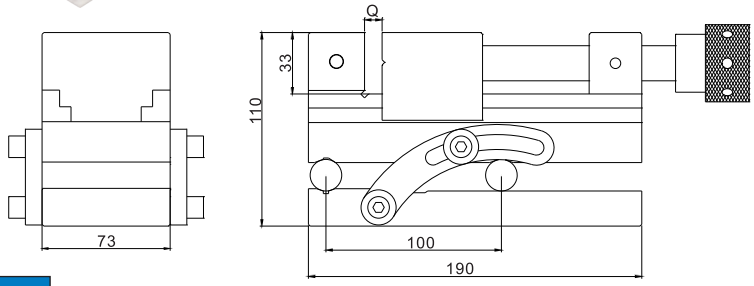

Code	Jaw opening (Q)	Jaw width	Adjustable angle
657-090-01	0-90mm	73mm	0-45°

PRECISION UNIVERSAL VISE 656

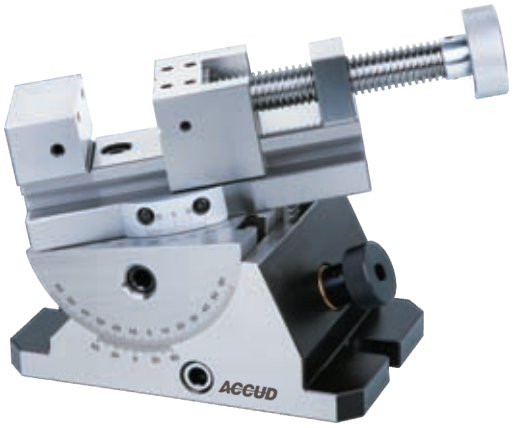

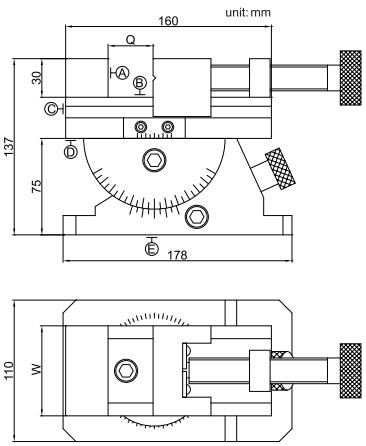

- Horizontal rotary:
  range 360°, graduation 0.05°
  Vertical incline: range 45°, graduation 0.05°
- With vertical incline adjust knob
- Parallelism and squareness between A, B, C and D: 5μm/100mm, parallelism between D and E at 0°: 10μm/100mm
- Made of tool steel
- Hardness HRC56-58

Code	Jaw opening(Q)	Jaw width(W)
656-080-01	0-80mm	70mm

CENTERING INDICATOR 297

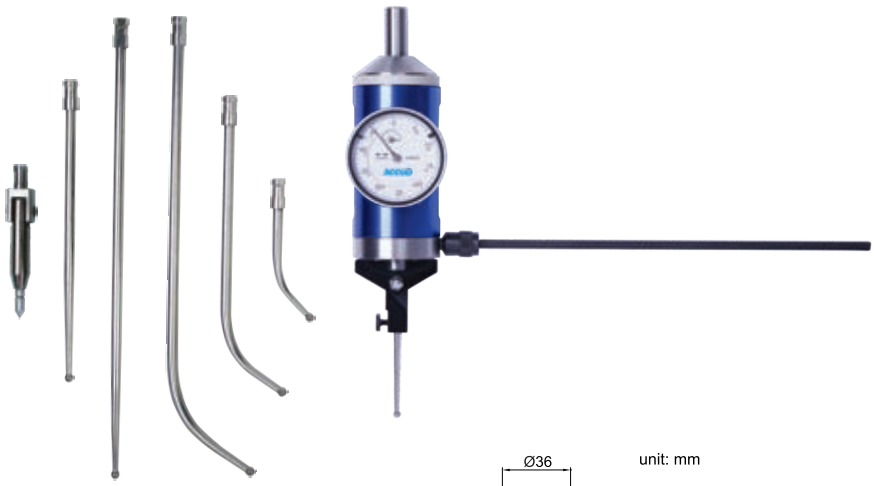

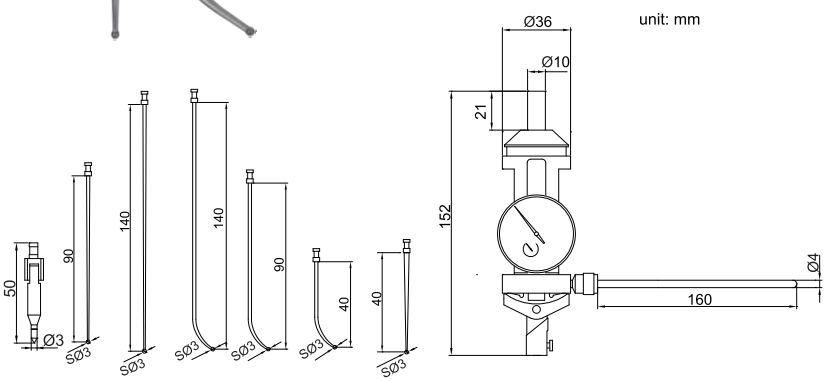

- For quick and accurate centering in boring and milling set-up
- Jeweled bearing
- Supplied with 7 type feelers

Code
297-003-11

SERIES 692 ELECTRONIC EDGE FINDER

- The LED will be light when the ball contacts the workpiece
- Not suitable for rotating use

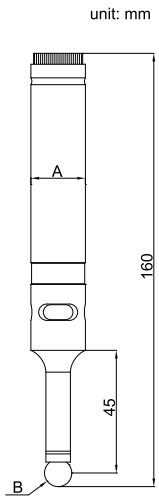

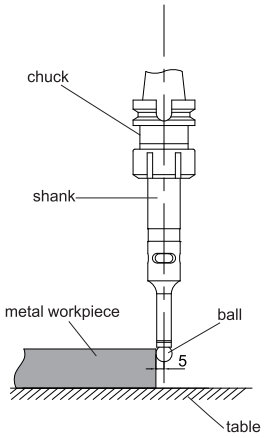

Code	Contact ball (B)	Shank(A)	Accuracy	Beeper
692-010-02	SØ10mm	Ø20mm	5μm	without
692-010-03	SØ10mm	Ø20mm	5μm	with

693 EDGE FINDER

- Hardened shank and contact point
- Suitable for machine speed 400-600rpm

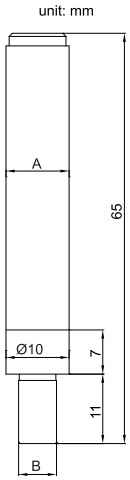

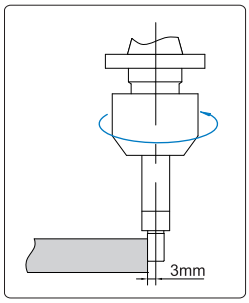

Code	Contact suface (B)	Shank(A)	Accuracy
693-010-01	Ø6mm	Ø10mm	8μm

DIGITAL ZERO SETTER 697

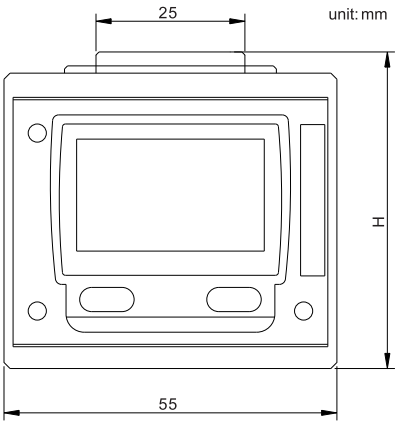

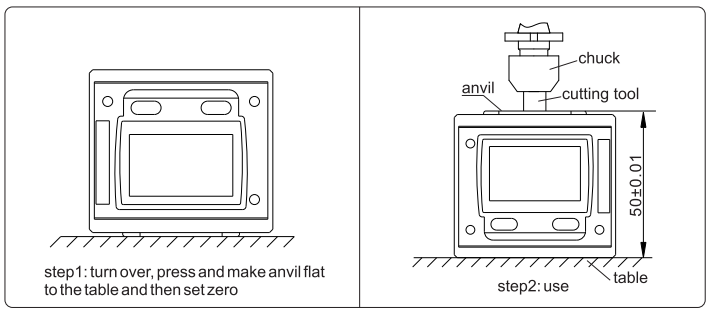

- IP65 protection level
- Magnetic base
- With backlight, will turn on automatically when close to zero (±0.002mm)
- Turn off automatically

Code	Accuracy
697-050-01	±10μm

ZERO SET 695

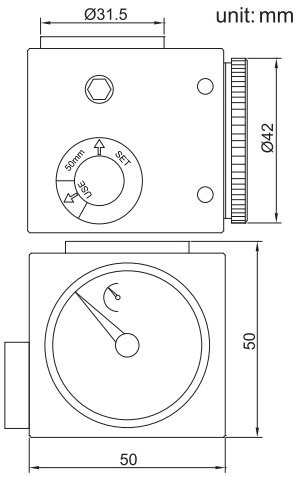

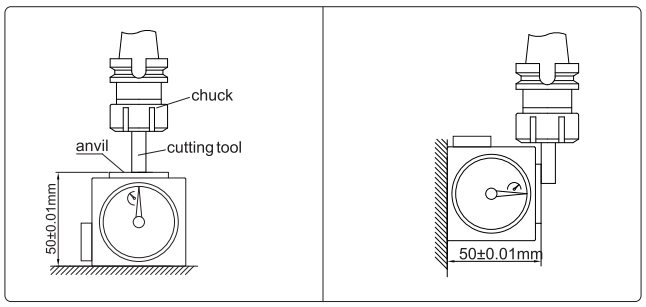

- Magnetic base

Code	Accuracy
695-050-01	±10μm

696 ZERO SET

- Magnetic base with on-off switch

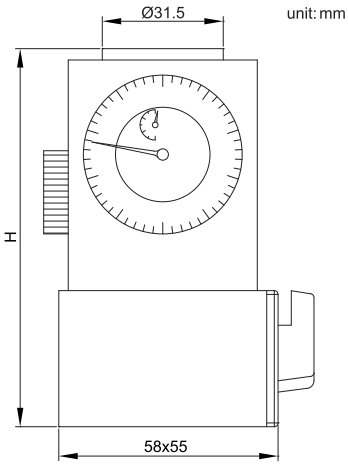

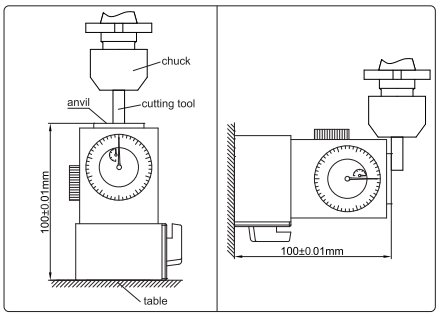

Code	Height (H)	Accuracy	Force
696-100-01	100mm	±10μm	9N(at 50mm)

SERIES 280 2-PIECE MEASURING TOOLS SET

280-000-02

packed in aluminium box

Code	Include
280-000-02	10mm dial indicator (222-010-11) Magnetic stand (281-060-01)
280-001-02	1 inch dial indicator (225-025-11) Magnetic stand (281-060-01)

3–PIECE MEASURING TOOL SET

280

- Includes:
  1) Vernier caliper, range 0-150mm/0-6", (code **120-006-12**)
  2) Outside micrometer, range 0-25mm (code **321-001-01**)
  3) 90° beveled edge square, 100x70mm (code **832-004-10**)

Code
280-000-03

3–PIECE MEASURING TOOL SET

280

- Includes:
  1) Digital caliper, range 0-150mm/0-6" (code **111-006-12**)
  2) Outside micrometer, range 0-25mm (code **321-001-01**)
  3) 90° beveled edge square, 100x70mm (code **832-004-10**)

Code
280-000-13

280 5–PIECE MEASURING TOOL SET

- Includes:
  1) Digital caliper, range 0-150mm/0-6" (code **111-006-12**)
  2) Outside micrometer, range 0-25mm (code **321-001-01**)
  3) Dial indicator, range 10mm (code **222-010-11**)
  4) Magnetic stand (code **281-060-01**)
  5) Micrometer stand (code **383-000-00**)

Code
280-000-05

280 5–PIECE MEASURING TOOL SET

- Includes:
  1) Digital caliper, range 0-150mm/0-6" (code **111-006-12**)
  2) Outside micrometer, range 0-25mm (code **321-001-01**)
  3) Dial indicator, range 10mm (code **222-010-11**)
  4) 90° beveled edge square, 100x70mm (code **832-004-10**)
  5) Scriber, 250mm (code **995-009-01**)

Code
280-000-15

8–PIECE MEASURING TOOL SET

280

- Includes:
  1) Digital caliper, range 0-150mm/0-6" (code **111-006-12**)
  2) Outside micrometer, range 0-25mm (code **321-001-01**)
  3) Protractor(code **812-003-01**)
  4) Pitch gauge, range 0.25-7mm, 24pcs (code **922-007-24**)
  5) Radius gauge(code **941-007-34**)
  6) Feeler gauge, range 0.05-1.00mm, 20pcs (code **912-100-20**)
  7) 90° beveled edge square, 100x70mm (code **832-004-10**)
  8) Scriber (code **995-009-01**)

Code
280-000-08

12–PIECE MEASURING TOOL SET

280

- Includes:
  1) Digital caliper, range 0-150mm/0-6" (code **111-006-12**)
  2) Outside micrometer, range 0-25mm (code **321-001-01**)
  3) Dial indicator, range 10mm (code **222-010-11**)
  4) Magnetic stand (code **281-060-01**)
  5) Protractor (code **812-003-01**)
  6) Pitch gauge, range 0.25-7mm, 24pcs (code **922-007-24**)
  7) Radius gauge(code **941-007-34**)
  8) Feeler gauge, range 0.05-1.00mm, 20pcs (code **912-100-20**)
  9) 90° beveled edge square, 100x70mm (code **832-004-10**)
  10) Scriber (code **995-009-01**)
  11) Depth base (code **179-000-00**)
  12) Zero setting bar

Code
280-000-12

CN1500/CF1500/CFN1500 COATING THICKNESS GAUGE

- F type probe is used to measure the thickness of non-magnetic coatings (zinc, copper, enamel, plastic and so on) on magnetic subtracts (iron, steel)
  N type probe is used to measure the thickness of non-conductive coatings (varnish ,enamel, plastic and so on) on conductive subtracts (zinc, copper, aluminum)
- External interchangeable probe
- Single and continuous working mode
- Low and high limits setting with judgement
- With average calculation
- With comparison measurement function
- With temperature compensation

CN1500

SPECIFICATION

Code	CF1500	CN1500	CFN1500
Probe type	F	N	F and N
Range	0～1500μm		
Accuracy	2μm (0～100μm)		
	2%(100～1500μm)		
Resolution	0.1μm (0～999μm)		
	1μm (1000～1250μm)		
Memory	500		
Power	3×AAA batteries		
Dimension(L×W×H)	150×50×29mm		
Weight	170g		

INCLUDED ACCESSORIES

Main unit	1pc
Calibration foil	1set
Calibration base	1set
USB cable	1pc
AAA battery	3pcs

COATING THICKNESS GAUGE

CFN1500B

- Integrated F and N type probe
- F type probe is used to measure the thickness of non-magnetic coatings (zinc, copper, enamel, plastic and so on) on magnetic subtracts (iron, steel)
  N type probe is used to measure the thickness of non-conductive coatings (varnish ,enamel, plastic and so on) on conductive subtracts (zinc, copper, aluminum)
- Large display screen
- V-type probe to make the cylinder measurement easier
- With um/mil unit conversion
- Automatic power on/ off
- With back light

SPECIFICATION

Range	0～1500μm
Accuracy	2μm(0～100μm)
	3%(100～1500μm)
Resolution	0.1μm (0～99.9μm)
	1μm (100～1500μm)
Min. measuring area	25×25mm
Min. curvature	convexity: 5mm; concave: 30mm
Min substrate thickness	magnetic material: 0.2mm; non magnetic material: 0.05mm
Memory	30sets
Power supply	AAA batteries
Dimension(L×W×H)	120×52×26mm
Weight	170g

INCLUDED ACCESSORIES

Main unit	1pc
Calibration foil	1set
Calibration base	1set
USB cable	1pc
AAA battery	2pcs

CF1250 COATING THICKNESS GAUGE

- Measure the thickness of non-magnetic coatings (zinc, copper, enamel, plastic and so on) on magnetic subtracts (iron, steel)
- Integrated ferrous probe
- V-type probe to make the cylinder measurement easier
- Single and continuous working mode
- Low and high limits setting with judgement
- With average calculation function

SPECIFICATION

Range	0~1250μm
Accuracy	2μm(0~100μm)
	2%(100~1250μm)
Resolution	0.1μm (0~999μm)
	1μm (1000~1250μm)
Memory	500
Power supply	3xAAA batteries
Dimension(L×W×H)	150×50×29mm
Weight	170g

INCLUDED ACCESSORIES

Main unit	1pc
Calibration foil	1set
Calibration base	1pc
AAA Battery	3pcs

ST100A ULTRASONIC THICKNESS GAUGE

- Measure the thickness of tank, pipe and big workpiece
- LCD with backlight

SPECIFICATION

Measuring range	1.2-225mm(steel)
Graduation	0.01mm(<100mm)
	0.1mm(≥100mm)
Repeatability	0.05mm(<100mm)
	0.1mm(≥ 100mm)
Accuracy	±0.5%L+0.04mm L is the thickness in mm
Velocity	1000-9999m/s
Min.measured tube	Ø20×3mm
Power	rechargeable battery
Dimension	64×116×27mm
Weight	220g

INCLUDED ACCESSORIES

Main unit	1pc
Transducer	1pc
Battery	1 set
Couplant	1 bottle

ULTRASONIC THICKNESS GAUGE ST200

- Measure the thickness of tank, pipe and big workpiece
- LCD with backlight

Transducer **PT-06** (optional)

Transducer **ZT-12** (optional)

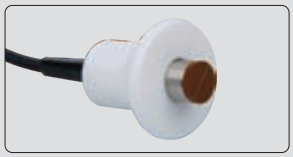

Transducer **GT-12** (optional)

SPECIFICATION

Graduation	0.01mm(<100mm)
	0.1mm(≥100mm)
Repeatability	0.03mm(<100mm)
	0.1mm(≥100mm)
Accuracy	±0.04mm (<10mm) ±(0.04+L/1000)mm (10~100mm) ±L/333mm (≥100mm) L is the thickness in mm
Velocity	1000-9999m/s
Power	3×AAA batteries
Dimension	64×116×27mm
Weight	220g

INCLUDED ACCESSORIES

Main unit	1pc
Transducer PT-08	1pc
AAA battery	3pcs
Couplant	1bottle
USB cable	1pc

OPTIONAL ACCESSORIES

Transducer	**PT-06, ZT-12, GT-12**

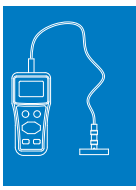

SPECIFICATION OF TRANSDUCERS

Code	Application	Range	Frequency	Min. pipe dimension diamater×thickness	Working temperature
PT-08	general use	0.8-300mm	5.0MHz	20×1.2mm	<60°C
PT-06	thin workpiece	0.75-40mm	7.5MHz	15×1.2mm	<60°C
ZT-12	casting steel	2-400mm	2.0MHz	30×4mm	<60°C
GT-12	high temperature	3-100mm	5.0MHz	25×3mm	<310°C

DM200 DIGITAL MICROSCOPE

- Magnification: 10X-200X
- Pixel: 2M
- Interface: USB2.0
- Snap pictures and record videos
- 8 pcs adjustable LED lights
- With measuring software and calibration rule

Optional Stand

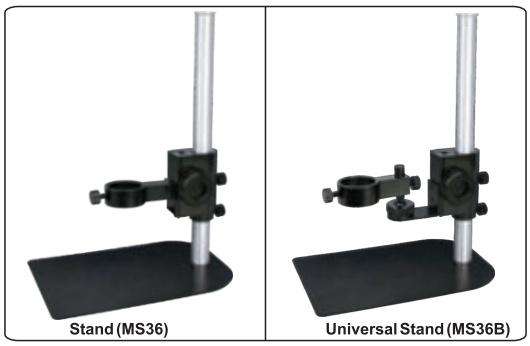

Magnification, View Filed and Focus Relationship

Magnification	Focus	View Filed
50X	21mm	9.5x7.1mm
100X	13mm	4.8x3.6mm
150X	16mm	3.2x2.4mm
200X	19mm	2.4x1.8mm

DM600 DIGITAL HIGH MAGNIFICATION MICROSCOPE

- Magnification: 450X-600X
- Pixel: 2M
- Interface: USB2.0
- Snap pictures and record videos
- 8 pcs adjustable LED lights
- With measuring software and calibration rule

Optional Stand

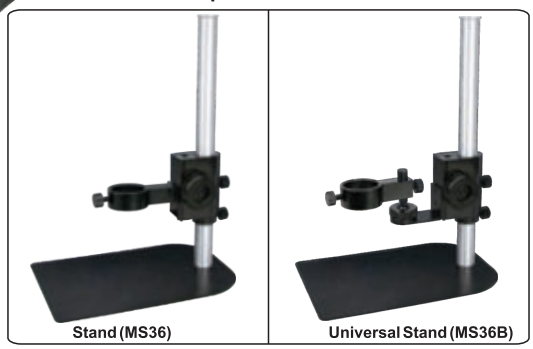

Magnification, View Filed and Focus Relationship

Magnification	Focus	View Filed
450X	1.4mm	1.05x0.79mm
500X	5.5mm	0.95x0.71mm
550X	8.6mm	0.86x0.64mm
600X	11.5mm	0.79x0.59mm

DIGITAL WIFI MICROSCOPE

WIFI200

- Magnification: 10X-200X
- Pixel: 2M
- Interface: USB2.0 or WiFi
- Snap pictures and record videos
- 8 pcs adjustable LED lights
- With measuring software and calibration rule

Optional Stand

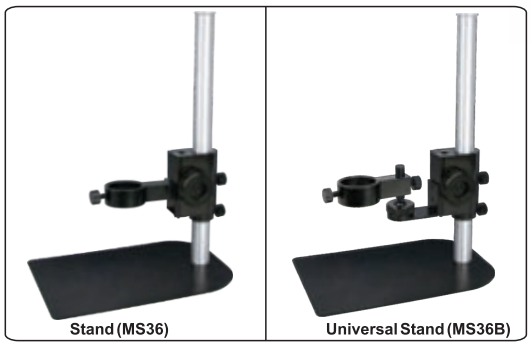

Stand (MS36) | Universal Stand (MS36B)

It can connected to smart phone , Ipad or computer via WIFI

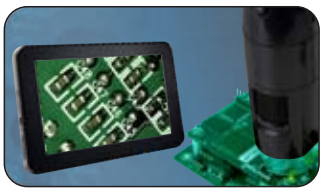

Magnification, View Filed and Focus Relationship

Magnification	Focus	View Filed
50X	21mm	9.5x7.1mm
100X	13mm	4.8x3.6mm
150X	16mm	3.2x2.4mm
200X	19mm	2.4x1.8mm

PORTABLE MEASURING MICROSCOPE

PM100

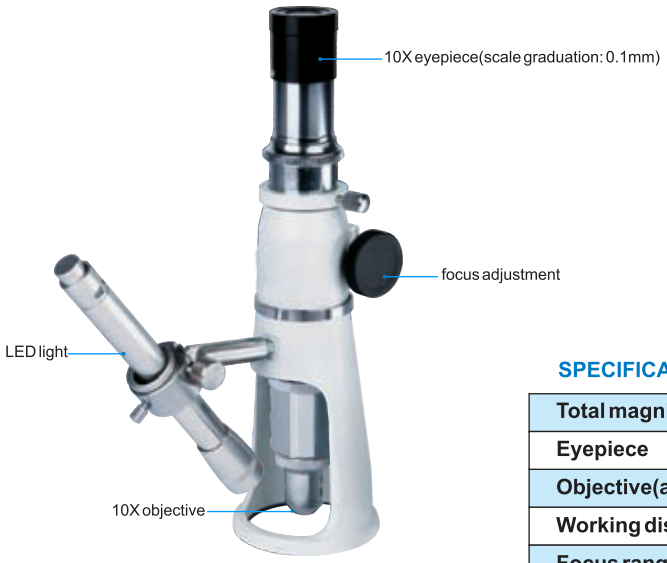

SPECIFICATION

Total magnification	100X
Eyepiece	10X
Objective(achromatic)	10X
Working distance	7mm
Focus range	30mm
Viewing field	Ø1.8mm
Graduation	0.01mm
Illumination	LED light
Diameter of base	Ø63mm
Height	210mm
Weight	650g

INCLUDED ACCESSORIES

Main unit	1pc
Pen light	1pc
Battery (AAA)	2pcs

DVM2000 HD VIDEO MICROSCOPE

- 12 inch wide screen HD LCD is included
- Can take picture and record videos
- With USB interface, for transferring pictures or measuring data
- High frame rate, without any delay in quick movement

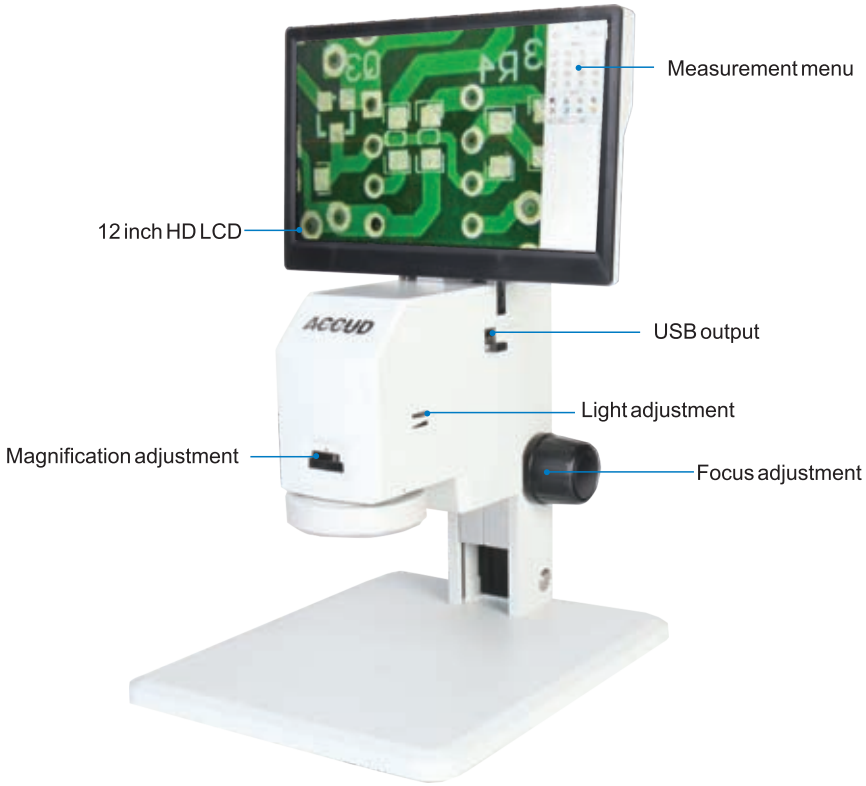

SPECIFICATION

Objective		0.7X ~ 4.5X (zoom, fixed at 0.7X, 1X, 2X, 3X, 4X,4.5X)
Total Magnification		9.3X-114.3X
View Field		1.8mm-12mm(L)
Working distance		96mm
Camera	Pixel	2M HDMI
	Pixel size	2.75*2.75μm
	Frame rate	60fps
Illumination		144pcs LEDs adjustable light
LCD display		12 inch HD LCD display, 1080P
Base size		260mmx320mm(LxW)
Weight		5.5kg

INCLUDED ACCESSORIES

Main unit	1pc
12 inch HD LCD	1pc
Wireless mouse	1pc
HDMI connection cable	1pc
Ø95mm black/white plastic plate	1pc
Calibration rule	1pc
AC/DC adapter	1pc

OPTIONAL ACCESSORIES

0.5X Objective	DVM2000-05-O
2X Objective	DVM2000-20-O

VIDEO MICROSCOPE DVM1000

- High resolution color camera
- With TF card, can save pictures and videos
- High frame rate, without any delay in quick movement
- With crosshair on the screen

SPECIFICATION

Objective		0.7X ~ 5X (zoom)
Total Magnification(with 22 inch monitor)		25X-180X
View Field		1.8mm-12mm(L)
Working distance		105mm
Camera	Resolution	1920x1080
	Pixel size	2.75*2.75μm
	Frame rate	60fps
Illumination		adjustable light
LCD display		12 inch HD LCD display, 1080P
Base size		260mmx320mm(LxW)
Weight		6kg

INCLUDED ACCESSORIES

Main unit	1pc
Wireless mouse	1pc
HDMI connection cable	1pc
Ø95mm black/white plastic plate	1pc
8G TF card	1pc
TF card reader	1pc
AC/DC adapter	1pc

SERIES ZS1045 ZOOM STEREO MICROSCOPE

- Trinocular head is used to connect to camera

ZS1045

SPECIFICATION

Code	ZS1045	ZS1045T
Optical	binocular	trinocular
Magnification	10X~45X	
Eyepiece	10X (viwe field: Ø20mm)	
Objective	1X~4.5X (zoom)	
Pupil distance	55~75mm	
Diopter adjustment	±5 diopter	
Working distance	97mm	
Illumination	selectable incident and transmitted LED light	
Dimension(L×W×H)	310×250×420mm	
Weight	6kg	

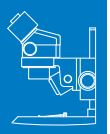

INCLUDED ACCESSORIES

Main unit	1pc
10X eyepiece	1pair
Eyepiece patch	1pair
Ø95mm frosted glass plate	1pc
Ø42mm frosted glass plate	1pc
Ø95mm black/white plastic plate	1pc
Dustproof cover	1pc

OPTIONAL ACCESSORIES

0.5X Eyepiece	ZS1045-05-O
0.75X Eyepiece	ZS1045-75-O
2X Eyepiece	ZS1045-02-O
10X Eyepiece with scale	ZS1045-10-FE
WF15X Eyepiece	ZS1045-15-E
WF20X Eyepiece	ZS1045-20-E
Camera	1300KPA

STEREO MICROSCOPE SM20/30/40

SM40

SPECIFICATION

Code	SM20	SM30	SM40
Total modification	10X/ 20X	10X/ 30X	20X/ 40X
Objective modification	1X/2X	1X/ 3X	2X/ 4X
Eyepiece	10X (view field : Ø20mm)		
Pupil distance	55 ~ 75mm		
Diopter adjustment	±5 diopter (only one eyepiece can be adjusted)		
Working distance	57mm		
Max. workpiece height	68mm		
Illumination	selectable incident and transmitted light		
Dimension(L×W×H)	120×200×300mm		
Weight	3kg		

INCLUDED ACCESSORIES

Main unit	1pc
10X eyepiece	1pc
Eyepiece patch	1pc
Ø95mm frosted glass plate	1pc
Ø95mm black/white plastic plate	1pc
Dustproof cover	1pc

OPTIONAL ACCESSORIES

5X eyepiece (view field: Ø20mm)	SM-05-E
15X eyepiece (view field: Ø15mm)	SM-15-E
20X eyepiece (view field: Ø10mm)	SM-20-E
Camera	1300KPA

MM1000A

METALLURGICAL MICROSCOPE

- For high magnification observation and metallurgical image analysis
- Infinite optical system, can add accessories like polarizer, analyzer into optical path without image quality influence

(camera is optional)

SPECIFICATION

Eyepiece(wide field)	10X(view field: Ø18mm)			
Objective(plan achromatic)	10X	20X	50X	100X(dry type)
Numerical aperture	0.25	0.40	0.70	0.85
Working distance	8.8mm	8.6mm	3mm	0.33mm
Stage	double layer			
	size: 242×200mm			
	travel: 30×30mm			
Pupil distance	53-75mm(adjustable)			
Diopter adjustment	±5 diopter(one eyepiece)			
Illumination	6V/30W halogen lamp, brightness is adjustable with polarizer and analyzer, built-in green, yellow, blue filters and frosted glass			
Weight	11kg			

INCLUDED ACCESSORIES

Main unit	1pc
Anti-dust cover	1pc
Filter(blue/green/yellow)	1pc of each

OPTIONAL ACCESSORIES

10X dividing eyepiece(0.1mm/div.)	**MM-EP10D**
Camera adapter(1X)	**MM-ADAPTER**
Digital camera	**1300KPA**
5X Objective	**MM-OB5**

40X Objective	**MM-OB40**
60X Objective	**MM-OB60**
80X Objective	**MM-OB80**

CAMERA 1300KPA

- Easy to connect computer by USB
- Supplied with measuring software


Connect with microscope


Connect with Vickers hardness tester

SPECIFICATION

Camera sensor	1/3" CMOS
Pixel	1.3 Mega
Interface	USB
Dimension (L×W×H)	65 × 48 × 43(mm)
Weight	400g

INCLUDED ACCESSORIES

Main unit	1pc
USB cable	1pc
Software	1pc

OPTIONAL ACCESSORIES

C-mount	1300KPA-CM
Calibration rule (graduation: 0.1mm)	RU01
Ø30mm eyepiece adaptor	AD30
Ø30.5mm eyepiece adaptor	AD305

GLASS SCALE SERIES 552

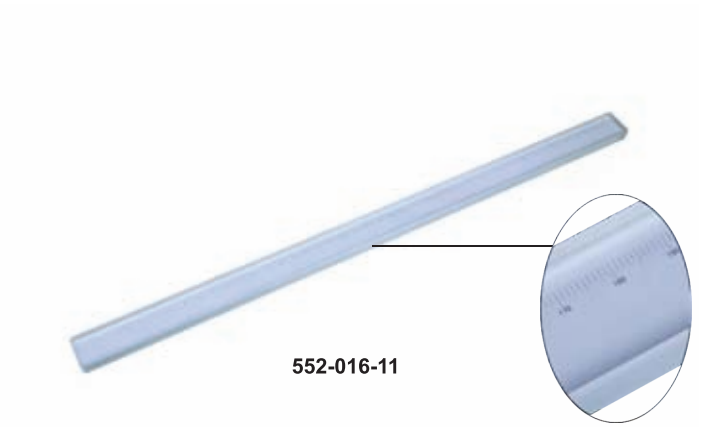
552-016-11

- For calibrating the accuracy of vision machine or profile projector
- Graduation:1mm

Code	Range (mm)	Accuracy (μm)
552-008-11	200	1.5
552-012-11	300	2
552-016-11	400	2
552-024-11	600	2.5

SERIES PP

PROFILE PROJECTOR

- Large screen of the read out
- Supplied with printer

PP3015

OPTIONAL ACCESSORIES

lens with half-reflection mirror

rotary table
(glass diameter 100mm, graduation 2°)

5X magnifier

holder with clamp

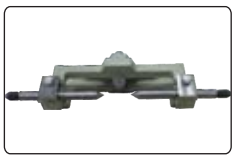

swivel center support

V-block with clamp

SPECIFICATION

Code	PP3015	PP3020
X-Y stage travel	150×50mm	200×100mm
Metal stage size	340×152mm	400×225mm
Glass stage size	195×95mm	245×145mm
Screen diameter	diameter: Ø300mm	
Image	inverted	
Linear scale resolution	1μm	
Accuracy	(4+L/25)μm L is the measuring length in mm	
Z(focus) travel range	80mm	
Max. load capacity	4kg	
Rotation scale	range: 0°~360°, resolution: 1' or 0.01°, accuracy: 6'	
Magnification accuracy	±0.1%	
Illumination	contour illumination: 12V/100W halogen lamp, 2-step(high/low) brightness adjustment	
	surface illumination: 24V/150W halogen lamp	
Readout display	X-Y stage travel, screen rotation	
Output	RS232 and USB	
Readout functions	measure coordinate of point measure coordinate of line measure center coordinate, radius of circle with three points measure distance between two objects measure angle with four points or two lines coordinate transform	
Dimension (L×W×H)	480×780×1150mm	
Weight	135kg	

INCLUDED ACCESSORIES

Main unit	1pc
10X lens with half-reflection mirror	1pc
Overlay chart clip	4pcs
Level	1pc
Anti-dust cover	1pc

OPTIONAL ACCESSORIES

20X lens with half-reflection mirror	PP3000-LENS20X
50X lens with half-reflection mirror	PP3000-LENS50X
100X lens with half-reflection mirror	PP3000-LENS100X
Rotary table	PP3000-TABLE
5X magnifier	PP3000-MAGNIFIER
Holder with clamp	PP3000-HOLDER
Swivel center support	PP3000-SUPPORT
V-block with clamp	PP3000-VBLOCK
Calibration scale	Series 552 (refer to page 208)

VM1010 VISION MACHINE

SPECIFICATION

Code	VM1010
Measuring range	100×100mm
Stage moving method	Manual
Linear scale resolution	1μm
Accuracy	(3+L/200)μm L is the measuring length in mm
Repeatability	2μm
Focus	92mm
Lens magnification	0.7X-4.5X
Total magnification	30-220X
Illumination	contour illumination: LED light brightness, can be adjusted by software
	surface illumination: LED light brightness, can be adjusted by software
Dimension (L×W×H)	400×300×600mm
Weight	30kg

INCLUDED ACCESSORIES

Main unit	1pc
Calibration block	1pc
Software (See page 213)	1pc

OPTIONAL ACCESSORIES

Computer	VM-PC
Operating table	VM-Table
Calibration scale	Series 552(refer to page 208)

VISION MACHINE SERIES VM

(computer and operating table is optional)

SPECIFICATION

Code	VM2010	VM3020
Measuring range	200×100mm	300×200mm
Stage moving method	Manual	
Linear scale resolution	1μm	
Accuracy	(3+L/200)μm L is the measuring length in mm	
Repeatability	2μm	
Focus	92mm	
Lens magnification	0.7X-4.5X	
Total magnification	30-220X	
Camera	1/3" 700TVL HD	
Illumination	contour illumination: LED, brightness adjustment	
	surface illumination: LED, brightness adjustment	
Dimension (L×W×H)	580×680×880mm	680×750×1000mm
Weight	160kg	220kg

SERIES VM

VISION MACHINE

INCLUDED ACCESSORIES

Main unit	1pc
Calibration block	1pc
Software with USB dongle	1pc
Video card	1pc
Counting card	1pc

OPTIONAL ACCESSORIES

Computer	VM-PC
Operating table	VM-Table
Calibration scale	Series 552 (refer to page 208)

SOFTWARE FOR ALL MANUAL VISION MACHINES

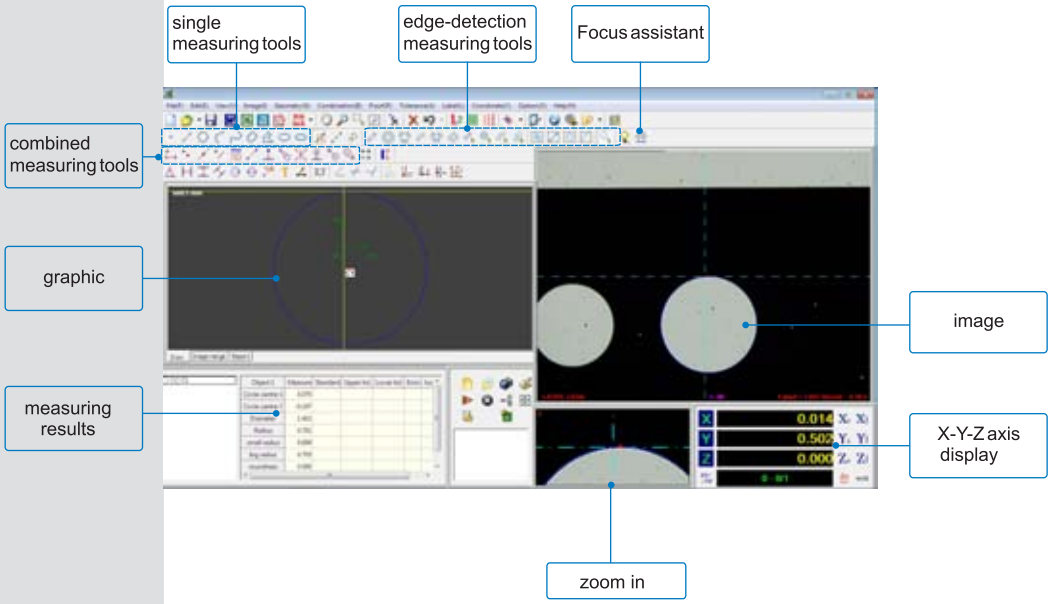

- **Single measuring tools:**

measure coordinate of point

measure length of line

measure center coordinate, radius, diameter and area of circle

measure length and diameter of arc

measure length of curve

measure width, length and area of rectangle

measure length and area of polygon

measure center coordinate, axis length and area of ellipse

- **Combined measuring tools:**

measure distance between two objects like, two points, two lines, a point to a line, a point to a circle and so on.

create a intersection point

find midpoint of a line

create a line

create a line, a circle and a arc based on points

measure distance between two points

measure distance from point to line

create tangent lines between point and circle

create angular bisector between two lines

measure distance from circle to line

measure distance between two circles

find tangent lines between two circles

ENDOSCOPE SERIES ES

- 2-way directions
- With adjustable LED light

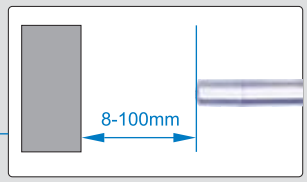

focus distance: 8-100mm

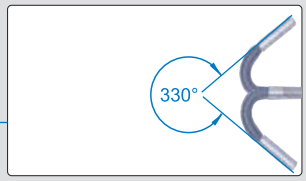

Max. bend angle: 330°

Code	ES5515	ES5530	ES4015	ES5315
Probe diameter	5.5mm	5.5mm	4.0mm	5.3mm
Cable lenght	1.5m	3m	1.5mm	1.5mm
Cable type	woven		tungsten	
Dust/waterproof probe	IP65			
Camera	0.45M Pixel			high resolution
Picture resolution	640x480			
Frame rate	30fps			
Illumination	8pcs LEDs		4pcs LEDs	8pcs high brightness LEDs
Video format	AVI or MPEG4			
Memory	8G SD card			
Power supply	rechargeable battery (for 4 hours working)			
Weight	550g	750g	500g	550g

INCLUDED ACCESSORIES

Main unit	1pc
Cable with probe	1pc
SD card 8G	1pc
AC/DC adapter	1pc
Video output cable	1pc
USB cable	1pc

HR150B MANUAL ROCKWELL HARDNESS TESTER

- Manual loading control

Small flat anvil

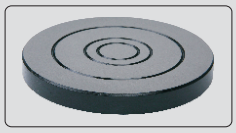

Large flat anvil

V-type anvil

SPECIFICATION

Load force	10kgf (98N)
Total load force	60kgf (588N), 100kgf (980N), 150kgf (1471N)
Stage elevation	manual
Loading control	manual
Graduation	1HR
Max. test height	255mm
Max. throat	160mm
Dimension	487×265×726mm
Weight	73kg

INCLUDED ACCESSORIES

Main unit	1pc
Ø1.5875mm ball carbide indenter	1pc
Diamond indenter	1pc
Flat anvil	2pcs
V-type anvil	1pc
Rockwell test block	3pcs
Dustproof cover	1pc

DIGITAL ROCKWELL HARDNESS TESTER

HR150A

- Manual loading control
- The hardness scale can be converted to HV and HB
- With USB interface, for transferring data

Small flat anvil

Large flat anvil

V-type anvil

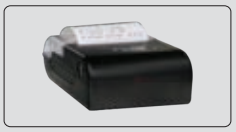

PR100 printer (optional)

SPECIFICATION

Load force	10kgf (98N)
Total load force	60kgf (588N), 100kgf (980N), 150kgf (1471N)
Stage elevation	manual
Loading control	manual
Resolution	0.1HR
Max. test height	170mm
Max. throat	150mm
Dimension	466×250×618mm
Weight	65kg

INCLUDED ACCESSORIES

Main unit	1pc
Ø1.5875mm ball carbide indenter	1pc
Diamond indenter	1pc
Flat anvil	2pcs
V-type anvil	1pc
Rockwell test block	3pcs
Dustproof cover	1pc

OPTIONAL ACCESSORIES

Wireless printer	**PR100**

HR150C DIGITAL ROCKWELL HARDNESS TESTER

- Motorized loading control
- The hardness scale can be converted to HV and HB
- With USB interface, for transferring data

Small flat anvil

Large flat anvil

V-type anvil

PR100 printer (optional)

SPECIFICATION

Load force	10kgf (98N)
Total load force	60kgf (588N), 100kgf (980N), 150kgf (1471N)
Stage elevation	manual
Loading control	auto
Loading time	1-99s
Resolution	0.1HR
Max. test height	255mm
Max. throat	160mm
Dimension	487×265×726mm
Weight	73kg

INCLUDED ACCESSORIES

Main unit	1pc
Ø1.5875mm ball carbide indenter	1pc
Diamond indenter	1pc
Flat anvil	2pcs
V-type anvil	1pc
Rockwell test block	3pcs
Dustproof cover	1pc

OPTIONAL ACCESSORIES

Wireless printer	**PR100**

MICRO-VICKERS HARDNESS TESTER

HVS1000M

- For measuring the hardness of the thin, small workpiece or coating
- Automatic turret
- The hardness scale can be changed to Rockwell scales

Camera interface (optional)

Camera (optional)

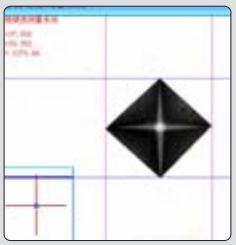

Measuring software (optional)

SPECIFICATION

Test load	0.01, 0.025, 0.05, 0.1, 0.2, 0.3, 0.5, 1kgf
Unit	HV0.01, HV0.025, HV0.05, HV0.1, HV0.2, HV0.3, HV0.5, HV1
Stage elevation	manual
Loading control	automatic(loading/dwell/unloading)
Loading time	5~60s (step: 5s)
Objective	10X(observation), 40X(measurement)
Eyepiece	15X
Total magnification	150X(observation), 600X(measurement)
Max. test height	80mm
Max. throat	95mm
X-Y stage	size: 100×100mm
	travel range: 25×25mm
	graduation: 0.01mm
Dimension	405×290×480mm
Weight	25kg

INCLUDED ACCESSORIES

Main unit	1pc
10X, 40X objective	1pc each
Indenter	1pc
Test block	2pcs
Slice holder	1pc
Vice	1pc
Cylinder holder	1pc
Level	1pc
Dustproof cover	1pc

OPTIONAL ACCESSORIES

Camera	**1300KPA**
Camera interface	**HVS-AD**
Measuring software	**HVS-SW**

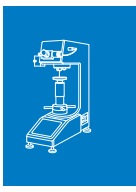

HVS10M/50M VICKERS HARDNESS TESTER

- For measuring the hardness of the thin, small workpiece or coating
- Automatic turret
- The hardness scale can be changed to Rockwell, Vickers, Brinell scales

Camera interface (optional)

Camera (optional)

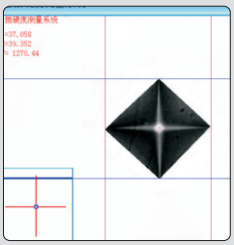

Measuring software (optional)

HVS10M

SPECIFICATION

Code	HVS10M	HVS50M
Test load	0.3, 0.5, 1, 2, 2.5, 3, 5, 10kgf	0.5, 1, 2, 2.5, 3, 5, 10, 20, 30, 50kgf
Stage elevation	manual	
Loading control	automatic(loading/dwell/unloading)	
Loading time	adjustable	
Objective	10X(observation), 40X(measurement)	10X(observation), 20X(measurement)
Eyepiece	10X	
Total magnification	100X(observation), 400X(measurement)	100X(observation), 200X(measurement)
Max. test height	170mm	185mm
Max. throat	130mm	
X-Y stage	size: 100×100mm	not included
	travel range: 25×25mm	
	graduation: 0.01mm	
Dimension	530×280×630mm	
Weight	35kg	

INCLUDED ACCESSORIES

Main unit	1pc
10X, 20X objective	1pc each
Indenter	1pc
Test block	2pcs
X-Y stage(for HVS10M)	1pc
V-avail (for HVS50M)	1pc
Flat avail (for HVS50M)	1pc
Dustproof cover	1pc

OPTIONAL ACCESSORIES

Camera	1300KPA
Camera interface	HVS-AD1
Measuring software	HVS-SW

DIGITAL BRINELL HARDNESS TESTER

HB3000

- Electronic close-loop load control system
- Can converted to HV, HK, HRA, HRB, HRC, HRD, HRE, HRF, HRG, HRK, HR15N, HR30N, HR45N, HR15T, HR30T, HR45T, HS

Small flat anvil

Large flat anvil

V-type anvil

SPECIFICATION

Measuring Range	8-650HBW
Loading force	62.5, 100, 125, 187.5, 250, 500, 750, 1000, 1500, 3000kgf
Measuring result	read from LCD
Stage elevation	manual
Load control	automatic
Load dwell time	5-60 seconds
Max. test height	225mm
Max. throat	135mm
Dimension	545×235×79mm
Weight	130kg

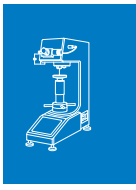

INCLUDED ACCESSORIES

Main unit	1pc
20X measuring microscope	1pc
Ø10mm carbide ball indenter	1pc
Ø5mm carbideball indenter	1pc
Ø2.5mm carbide ball indenter	1pc
Hardness test block 150-250HBW10/3000	1pc

Hardness test block 150-250HBW5/700	1pc
Small flat anvil	1pc
Large flat anvil	1pc
V-type anvil	1pc
Anti-dust cover	1pc

RBV150C

ROCKWELL/BRINELL/ VICKERS HARDNESS TESTER

- For Rockwell, Brinell and Vickers testing
- Rockwell testing value gets from screen, and the Brinell and Vickers hardness gets from table in the operation manual

Small flat anvil

Large flat anvil

V-type anvil

Medium flat anvil

SPECIFICATION

Preload force for Rockwell	98N
Total force for Rockwell	588 , 980 , 1471 N
Rockwell resolution	0.1HR
Load force for Brinell	306, 613, 1839N
Load force for Vickers	294N
Stage elevation	manual
Loading control	motorized
Max. test height for Rockwell	175mm
Max. test height for Brinell	100mm
Max. test height for Vickers	115mm
Max. throat	165mm
Dimension	520×240×700mm
Weight	105kg

INCLUDED ACCESSORIES

Main unit	1pc
Ø1.5875mm ball carbide indenter	1pc
Diamond indenter for Rockwell	1pc
Ø5mm ball indenter for Brinell	1pc
Ø2.5mm ball indenter for Brinell	1pc
Indenter for Vickers	1pc
Small flat anvil for Rockwell	1pc
Large flat anvil for Rockwell	1pc

V-type anvil	1pc
Medium flat anvil for Brinell and Vickers	1pc
HRC hardness test block	2pcs
HRB hardness test block	1pc
Brinell hardness test block	1pc
Vickers hardness test block	1pc
Dustproof cover	1pc

PORTABLE HARDNESS TESTER HL100

- Large LCD display with backlight
- Based on HL scale, converted to other hardness scales (HV, HB, HRC, HRB, HS) and tensile strength MPa
- With wireless printer
- Can set impact direction
- With average value calculation function
- Automatic power off
- Conforms to the standard ASTM A956-02

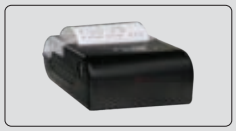

Wireless printer (included)

Support ring (12pcs /set, optional)

SPECIFICATION

Resolution	1HLD, 1HV, 1HB, 0.1HRC, 0.1HRB, 1HS, 1MPa
Accuracy	±6HLD/0.6HRC(HLD=800)
Min. workpiece weight	5kg (directly)
	2kg (on solid support)
	0.1kg (coupled on large plate)
Min. workpiece thickness	5mm
Min. workpiece diameter	22mm
Max. workpiece surface roughness	1.6μm (Ra)
Power	3 x AAA batteies
Dimension	150 × 80× 24mm

INCLUDED ACCESSORIES

Main unit	1pc
Wireless printer	1pc
Test block	1pc
Small support ring	1pc
Brush	1pc
Charger for printer	1pc

OPTIONAL ACCESSORIES

Support ring (12pcs /set)	**HL-SP**

HL200 PORTABLE HARDNESS TESTER

- Touch screen, with backlight
- Based on HL scale, converted to other hardness scales (HV, HB, HRC, HRB, HS) and tensile strength Mpa
- With wireless printer
- Can set impact direction
- Memory : 500
- Low and high limits with judgement
- Automatic power off
- Conforms to the standard ASTM A956-02

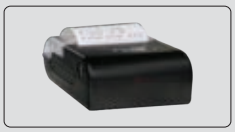

Wireless printer (included)

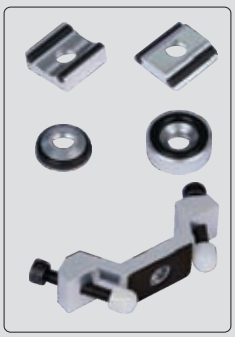

Support ring (12pcs /set, optional)

DC(optional) C(optional) D(included) D+15(optional) DL(optional) G(optional)

SPECIFICATION

Resolution	1HLD, 1HV, 1HB, 0.1HRC, 0.1HRB, 1HS, 1MPa
Accuracy	±6HLD/0.6HRC(HLD=800)
Min. workpiece weight	5kg (directly)
	2kg (on solid support)
	0.1kg (coupled on large plate)
Min. workpiece thickness	5mm
Min. workpiece diameter	22mm
Max. workpiece surface roughness	1.6μm(Ra)
Power	Rechargeable battery
Dimension	135×83×24mm

INCLUDED ACCESSORIES

Main unit	1pc
Wireless printer	1pc
Test block	1pc
Small support ring and brush	1pc each
USB cable and software	1pc
Charger	2pcs

OPTIONAL ACCESSORIES

Impact device DC	**HL200-DC**
Impact device C	**HL200-C**
Impact device D+15	**HL200-D15**
Impact device DL	**HL200-DL**
Impact device G	**HL200-G**
Support ring (12pcs /set)	**HL-SP**

PORTABLE HARDNESS TESTER HL400/HL400B

HL400

- Economic type
- Based on HL scale, converted to other hardness scales (HV, HB, HRC, HRB, HS) and tensile strength MPa
- Impact direction cab be set
- With average value calculation function
- Automatic power off
- Conforms to the standard ASTM A956-02

SPECIFICATION

Code	HL400	HL400B
Printer	Without	With
Resolution	1HLD, 1HV, 1HB, 0.1HRC, 0.1HRB, 1HS, 1MPa	
Accuracy	±8HLD/0.8HRC(HLD=800)	
Min. workpiece weight	5kg (directly)	
	2kg (on solid support)	
	0.1kg (coupled on large plate)	
Min. workpiece thickness	5mm	
Min. workpiece diameter	22mm	
Max. workpiece surface roughness	1.6μm(Ra)	
Power	3 xAAA batteies	
Dimension	150×67×29mm	

INCLUDED ACCESSORIES

Main unit	1pc	Brush	1pc
Test block	1pc	USB cable	1pc
Small support ring	1pc	Batteries	3pcs

BARCOL HARDNESS TESTER HB937-1

- To measure the hardness of thick workpieces made of pure aluminum, aluminum alloy, fiber reinforced plastic, hard plastic, etc.
- Comforms to ASTM B648-2000

SPECIFICATION

Hardness range	0 ~ 100HBa (equal to 25 ~ 150HBW)
Graduation	1HBa
Accuracy	±2HBa (42 ~ 52HBa) ±1HBa (84 ~ 88HBa)
Min. workpiece thickness	0.8mm
Dimension	142×65×90mm
Weight	500g

INCLUDED ACCESSORIES

Main unit	1pc
Spare indenter	2pcs
Hardness test block	2pcs
Wrench	1pc

SERIES HSM

SHORE HARDNESS TESTER

- Conforms to ISO868, ISO7619, ASTM D 2240
- With peak value indicator

HSM1A

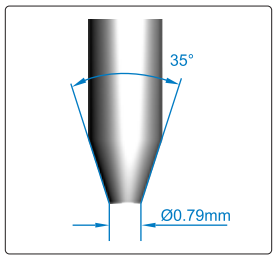

HSM1A indenter

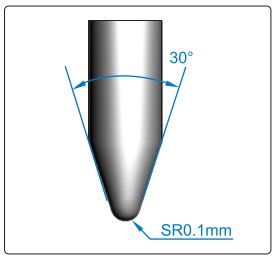

HSM5D indenter

SPECIFICATION

Code	HSM1A	HSM5D
Scale	Shore A	Shore D
For material	soft plastic, rubber, leather, etc.	hard plastic, hard rubber, etc.
Measuring range	20～90HA	20～90HD
Graduation	1HA	1HD
Accuracy	±1HA	±1HD
Indenter protrusion	2.5mm	
Weight	500g	

OPTIONAL ACCESSORIES

Stand for HSM1A	HSM-1A-ST
Stand for HSM5D	HSM-5D-ST

DIGITAL SHORE HARDNESS TESTER

SERIES HS

- Conforms to ISO868, ISO7619, ASTM D 2240
- Testing time is adjustable
- With average calculation function

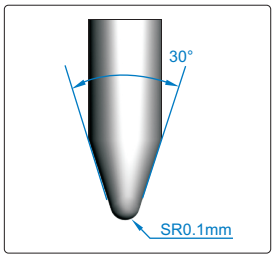

HS5D indenter

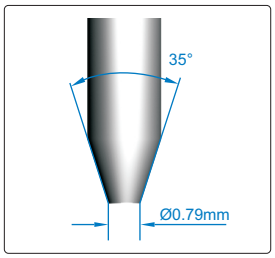

HS1A indenter

HS1A

Standard block (included)

SPECIFICATION

Code	HS1A	HS5D
Scale	Shore A	Shore D
For material	soft plastic, rubber, leather, etc.	hard plastic, hard rubber, etc.
Measuring range	20 ~ 90HA	20 ~ 90HD
Resolution	0.1HA	1HD
Accuracy	±1HA	±1HD
Indenter protrusion	2.5mm	
Power	rechargeable battery	
Weight	180g	

INCLUDED ACCESSORIES

Main unit	1pc
Standard block	1pc
Charger	1pc

OPTIONAL ACCESSORIES

Printer	PR100
Stand for HS1A	HS-1A-STD
Stand for HS5D	HS-5D-STD

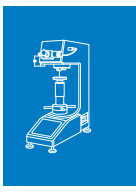

SERIES HW — WEBSTER HARDNESS TESTER

- To measure the hardness of soft metal such as aluminum alloy, copper, brass, soft steel
- Conforms to the standard ASTM B647

HW-L20

SPECIFICATION

Code	HW-L20	HW-L20A	HW-L20B	HW-B75	HW-C75	HW-B92
Application	aluminum alloy			hard aluminum alloy and brass	soft brass and copper	soft steel and cold-rolled steel
Measuring hardness range	58-131HV			63-105HRF	18-100HRE	50-92HRB
Thickness range to be measured of flat workpiece	0.4 ~ 6mm	0.4 ~ 13mm	0.4 ~ 8mm	0.4 ~ 6mm	0.4 ~ 6mm	0.4 ~ 6mm
Min. Internal diameter of tube workpiece	Ø10mm	Ø10mm	Ø6mm	Ø10mm	Ø10mm	Ø10mm
Hardness range	0 ~ 20HW					
Min. reading	1HW					
Accuracy	±0.5HW (at 5 ~ 17HW)					
Dimension	205×30×85mm					
Weight	500g					

INCLUDED ACCESSORIES

Main unit	1pc
Spare indenter	1pc
Hardness test block	1pc
Wrench	1pc

SERIES BLK — STANDARD HARDNESS BLOCK

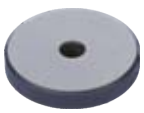

Rockwell/Vickers/Brinell

Shore

Leeb

SPECIFICATION

Code	Type	Hardness
BLK-HRC1	Rockwell C	60-70HRC
BLK-HRC2		20-30HRC
BLK-HRB1	Rockwell B	85-95HRB
BLK-HRB2		60-70HRB
BLK-HV1	Vickers	700-800HV5
BLK-HV2		700-800HV10
BLK-HV3		400-600HV5
BLK-HV4		400-600HV10
BLK-HB1	Brinell	150-250HBW 10/3000
BLK-HB2		150-250HBW 5/750
BLK-HLD	Leeb	750-830HLD
BLK-HSA	Shore A	7pcs/set: 30-39HA, 40-49HA, 50-59HA, 60-69HA, 70-79HA, 80-89HA, 90-99HA

ROUGHNESS TESTER SR200

- 13 roughness parameters
- With probe position indicator
- Connected with printer via bluetooth
- Roughness values, profile, and curve can be shown on the display
- Memory of maximum 100 results
- With a mini SD card slot, can save the result into SD card
- Automatic power off

unit: mm

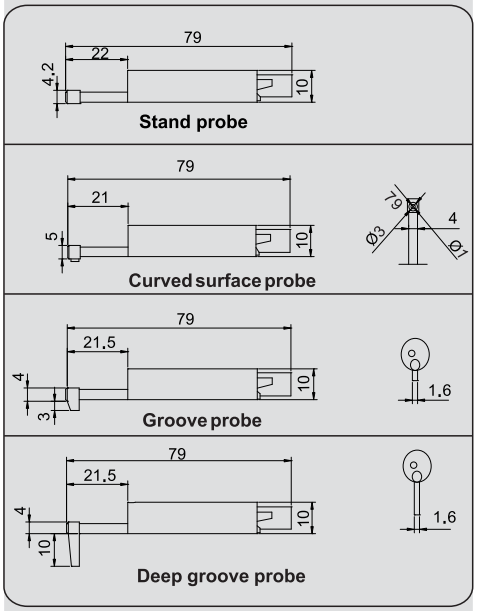

measuring software

SPECIFICATION

Parameters		Ra, Rz, Ry,Rq, Rp, Rm, Rt R3z, Rmax, Sk, S, Sm, tp
Range		160µm
Accuracy		±10%
Resolution (Ra)		0.001µm
Probe	type	inductive
	stylus radius/angle	5µm/90°
	stylus material	diamond
Measuring force		0.4mN
Measuring unit		µm/µin
Cut off		0.25/0.8/2.5mm
Number of cut-offs		1 to 5
Traverse speed		0.5mm/s, 1mm/s
Memory		100 measurement results
Output		USB
Power		built-in rechargeble battery
Dimension(L×W×H)		140×52×48mm
Weight		440g

INCLUDED ACCESSORIES

Main unit	1pc
Standard probe	1pc
Calibration block	1pc
Calibration support	1pc
Adjustable stand	1pc
Probe cover	1pc
USB cable and software	1pc
AC/DC adapter	1pc

OPTIONAL ACCESSORIES

Extension rod	SR200-ER
Curved surface probe	SR200-02
Groove probe	SR200-03
Deep groove probe	SR200-04
Test stand	SR200-STD
Printer	SR200-PR

SR300 ROUGHNESS TESTER

- Pocket size
- With a tablet, can set the parameter quickly
- Connected with tablet via bluetooth
- Roughness values, profile, and curve can be shown on the display

unit: mm

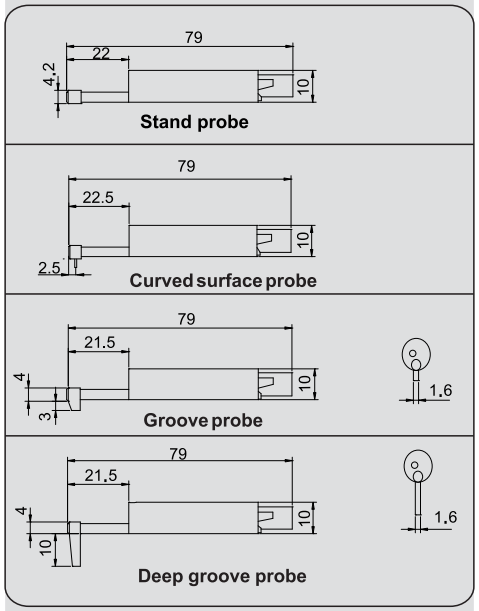

Measuring software

SPECIFICATION

Parameters		Ra, Rz, Ry,Rq, Rp, Rm, Rt R3z, Rmax, Sk, S, Sm, tp
Range(Ra)		0.025-12.5μm
Accuracy		±10%
Resolution (Ra)		0.001μm
Probe	type	inductive
	stylus radius/angle	5μm/90°
	stylus material	diamond
Measuring force		0.4mN
Measuring unit		μm/μin
Cut off		0.25/0.8/2.5mm
Number of cut-offs		1 to 5
Traverse speed		0.5mm/s, 1mm/s
Output file format		Word, Excel
Power		built-in rechargeble battery
Dimension(L×W×H)		130×40×44mm
Weight		340g

INCLUDED ACCESSORIES

Main unit	1pc
Standard probe	1pc
Tablet	1pc
Calibration block	1pc
Calibration support	1pc
USB cable	1pc
AC/DC adapter	1pc

OPTIONAL ACCESSORIES

Extension rod	SR200-ER
Curved surface probe	SR200-02
Groove probe	SR200-03
Deep groove probe	SR200-04
Test stand	SR200-STD
Printer	SR200-PR

SURFACE ROUGHNESS SPECIMEN

RC30

- For checking, identifying and specifying the roughness by symbol
- Accuracy: -17% ~ +12%

Machining Method	Quantity	Roughness (Ra)
Flat lapping	2	0.1, 0.05μm
External grinding	4	0.2, 0.4, 0.8, 1.6μm
Plain grinding	6	0.05, 0.1, 0.2, 0.4, 0.8, 1.6μm
Horizontal milling	6	0.4, 0.8, 1.6, 3.2, 6.3, 12.5μm
Vertical milling	6	0.4, 0.8, 1.6, 3.2, 6.3, 12.5μm
Turning	6	0.4, 0.8, 1.6, 3.2, 6.3, 12.5μm

TEMPERATURE METER

HTC-1

SPECIFICATION

Temperature range	-20℃-60℃
Temperature accuracy	1%
Temperature resolution	0.1℃
Humidity range	10%RH-99%RH
Humidity accuracy	5%
Humidity resolution	1%
Power supply	AAA battery
Weight	50g
Dimension	98×106×20 mm

INCLUDED ACCESSORIES

Main unit	1pc
Battery	1pc

IT700 INFRARED THERMOMETER

- For quick measuring remote temperature
- Easy to operate

SPECIFICATION

Measuring temperature range	-50℃-700℃
Accuracy	1.5% or 1.5 ℃
Repeatability	0.5 ℃ or 1%
Distance spot ratio	12:1
Response time	500ms
Resolution	0.1 ℃
Power supply	9V battery
Emissivity	0.1-1.00 adjustable
Weight	196g
Dimension	186×119×50 mm

INCLUDED ACCESSORIES

Main unit	1pc
Battery	1pc

WMM700 WOOD MOISTURE METER

- For quick measuring wood moisture
- Easy to operate

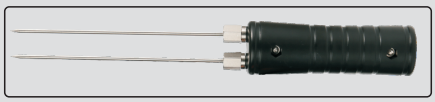

Extension probe (Optional)

SPECIFICATION

Moisture	Measuring range	2-40%/50%/60%/70%(for different wood)
	Accuracy	±1%+0.5
	Resolution	0.5 %
Temperature	Measuring range	-10 ℃-60℃
	Accuracy	±1%
	Resolution	0.1 ℃
Humidity	Measuring range	20%RH-95%RH
	Accuracy	±5% RH
	Resolution	0.1% RH
Power supply		2xAAA battery
Weight		107g
Dimension		136×55×60mm

INCLUDED ACCESSORIES

Main unit	1pc
Battery	1pc

OPTIONAL ACCESSORIES

Extension probe	WMM700-EP

LASER DISTANCE METER TM100

- IP54 protection
- With a level in the body
- With distance, area, volumn and height measurement function
- With Max, Min measuring function
- With backlight
- Power off automatically

SPECIFICATION

Measuring range	0.1m-100m
Accuracy (at the prefect reflection surface)	1.5mm
Resolution	1mm
Unit	m/inch/ft
Light spot	Φ8mm@40m
Memory	20
Power supply	2x1.5V AAA batteries
Laser	635nm<1mW
Weight	110g
Dimension	120×54×30 mm

INCLUDED ACCESSORIES

Main unit	1pc
Battery	1pc

LASER DISTANCE METER TM1200

- IP54 protection
- Can measure distance, angle and speed
- Power off automatically

Distance, angle measurement

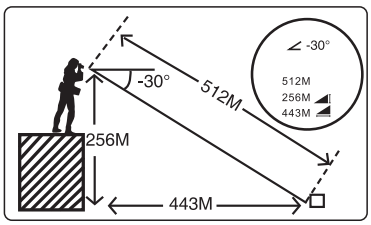

Speed measurement

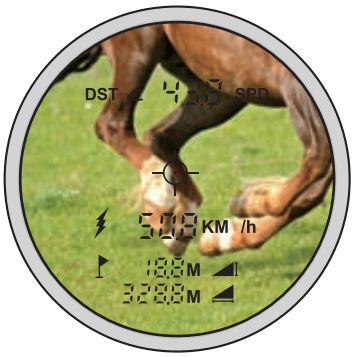

SPECIFICATION

Measuring range	3m-1200m
Magnification	8X
View field	7°
Distance measuring accuracy	±1m
Speed measuring accuracy	±5km/h
Power supply	Rechargeable battery(for 30000 times)
Laser	635nm<1mW
Weight	197g
Dimension	104×77×41 mm

LT900 LASER TACHOMETER

- With back light
- Real-time/ Max/Min/avarage measurement
- Can review the last measuring value

SPECIFICATION

Measuring range		2.5-99999rpm
Resolution	**<1000rpm**	0.1rpm
	≥1000rpm	1rpm
Accuracy	**<1000rpm**	(±1%+5d)rpm
	≥1000rpm	(1%+5d)rpm
Measuring distance(d)		50-500mm
Power supply		2x1.5V AAA battery
Weight		106g
Dimension		56×30×127 mm

AM30 DIGITAL ANEMOMETER

- With temperature display
- With back light
- Real-time/ Max/Average measurement
- Unit: m/s, km/h, ft/min, Knots, mph

SPECIFICATION

Measuring range	0.3-30m/s
Accuracy	±5%
Resolution	0.1m/s
Power supply	9V battery
Weight	154g
Dimension	155×56×35 mm

SLM130 DIGITAL SOUND LEVEL METER

- Fast(2 time/sec) /slow(1 time/sec) display
- With back light
- Real-time and Max/Min measurement
- High limits setting with judgement and alarm

SPECIFICATION

Measuring sound range	30-130db
Accuracy	1.5db
Resolution	0.1db
Power supply	9V battery
Weight	64g
Dimension	143×56×35 mm

20°/60°/85° GLOSS METER GM268

- To test the gloss of painting, printing ink, surfaces of future metal, granite, ceramic, plastic, paper, etc.
- Conforms to ISO 2813, ASTM D 2457, ASTM D 523
- Large display screen

SPECIFICATION

Incidence angle	20°	60°	85°
Measuring range	0~2000GU	0~1000GU	0~160GU
Resolution	0.1GU (range<119.9GU)		
Accuracy	±1.5GU (range<100GU)		
	±1.5% (range>100GU)		
Repeatability	±0.1GU (range<10GU)		
	±0.2GU (range: 10~100GU)		
	±0.2% (range>100GU)		
Measuring speed	1s		
Measuring area	10×10mm	15×9mm	36×5mm
Power suppy	Rechargeable battery		
Dimension	160×75×90mm		
Weight	350g		

INCLUDED ACCESSORIES

Main unit	1pc
Calibration block	1pc
USB cable and software	1pc

COLOR METER CM200

- Convenient and fast locating
- Portable structure design which is more conductive to keeping the instrument stable

SPECIFICATION

Illuminating/Viewing Geometry	8/d
Measuring Aperture	Φ8mm
Light Source	D65
Light Source Device	LED blue light excitation
Memeory	100pcs standards
Repeatability	<0.08ΔE*ab
Power supply	rechargeable lithium-ion battery
Lamp Life	3 years, more than 1 million measurements
Charging Time	2 hours (first time 8 hours--100% electricity)
Weight	500g
Dimension	205×70×100 mm

INCLUDED ACCESSORIES

Main unit	1pc
White calibration block	1pc
Charger	1pc
USB cable and software	1pc

CM3010 SPECTROPHOTO METER

- Concave grating spectrophotometric
- 3.5-inch TFT color LCD
- D/8 geometrical optics, conforms with CIE No.15,ISO7724/1,ASTM E1164, DIN5033
- Use long life and low power consumption combined LED light source
- Switchable 8mm/4mm aperture, support both SCI and SCE at the same time
- Large storage capacity, over 20,000 measurement data
- USB port and Bluetooth 4.0
- With software

SPECIFICATION

Optical geometry		reflect: di:8°, de:8°(diffused illumination, 8-degree viewing angle)
Integrating sphere size		Ø48mm
Light source		combined LED ligh
Spectrophotometric mode		concave grating
Sensor		256 image element double array CMOS image sensor
Wavelength range		400~700nm
Wavelength interval		10nm
Semiband width		10nm
Measured reflectance range		0~200%
Measuring aperture		dual aperture: MAV: Ø8mm; SAV: Ø4mm
Specular component		SCI&SCE
Color space		CIE LAB, XYZ, Yxy, LCh, CIE LUV, HunterLAB
Color difference formula		ΔE*ab, ΔE*uv, ΔE*94, ΔE*cmc(2:1), ΔE*cmc(1:1), ΔE*00v, ΔE(Hunter)
Other colorimetric index		WI(ASTM E313, CIE/ISO, AATCC, Hunter), YI(ASTM D1925, ASTM 313), Metamerism index MI, Staining fastness, Color fastness, Colorstrength, Opacity
Observer angle		2°/10°
Illuminant		A, C, D50, D55, D65, D75, F1, F2, F3, F4, F5, F6, F7, F8, F9, F10, F11, F12, CWF, U30, TI83, TI84, U35
Displayed data		spectrogram/values, samples chromaticity values, color difference values/graph, PASS/FAIL result, color offset
Measuring time		2.6s
Repeatability	**Spectral reflectance**	MAV/SCI, within 0.1% of standard deviation(400~700nm: 0.2%)
	Colorimetric values	MAV/SCI: ΔE*≤0.04
Inter-instrument error		MAV/SCI: ΔE*≤0.2
Measurement mode		single measurement, average measurement
Data port		USB, Bluetooth 4.0
Data storage		standard 1000 pcs, sample 20000 pcs
Illuminant life span		5 years, more than 3 million times measurements
Battery		Li-ion battery, 5000 measurements within 8 hours
Dimension		184×77×105mm
Weight		600g

INCLUDED ACCESSORIES

Main unit	1pc
White and black calibration cavity	1pc
USB cable and software	1pc
AC/DC adapter	1pc

OPTIONAL ACCESSORIES

Printer	**CM3010-PT**
Powder test box	**CM3010-PB**

DIGITAL FORCE GAUGE SERIES DF

DF200

- For pull and push measurement
- Adjusting the display direction automatically
- With overload protection
- Peak and real-time working mode
- Unit: mN, N, gf, kgf, ozf, lbf
- Memory: 1000
- Power off automatically
- Low and high limits setting with judgement
- With software, can show the force graph

Stand(Code: **FS1000, Optional**)

SPECIFICATION

Code	DF10	DF20	DF50	DF100	DF200	DF500	DF1000
Range	10N	20N	50N	100N	200N	500N	1000N
Resolution	0.001N	0.005N	0.005N	0.005N	0.005N	0.01N	0.1N
Accuracy	±0.2% x FS (full scale)						
Power	rechargeable battery						
Dimension	153x73x34mm						
Weight	700g						

INCLUDED ACCESSORIES

Main unit	1pc
Charger	1pc
Software	1pc
Push/pull clamps	6pcs

OPTIONAL ACCESSORIES

Wireless printer	PR100
Stand	FS1000

SERIES DFXXE

DIGITAL FORCE GAUGE

- For pull and push measurement
- Adjusting the display direction automatically
- With overload protection
- Peak and real-time mode
- Unit: N, gf, kgf, ozf, lbf
- Memory: 500
- Power off automatically

Stand(Code: **FS1000, Optional**)

DF1000E

SPECIFICATION

Code	DF10E	DF50E	DF100E	DF500E	DF1000E
Range	10N	50N	100N	500N	1000N
Resolution	0.01N	0.01N	0.1N	0.1N	1N
Accuracy	±0.3% x FS (full scale)				
Power	rechargeable battery				
Dimension	150x72x33mm				
Weight	450g				

INCLUDED ACCESSORIES

Main unit	1pc
Charger	1pc
Software	1pc
Push/pull clamps	6pcs

OPTIONAL ACCESSORIES

Wireless printer	**PR100**
Stand	**FS1000**

FORCE GAUGE SERIES NK

- Push and pull test
- Peak(max.) or tracking work mode

NK-500

flat push tip

V type push tip

knife-edge push tip

point push tip

pull clamp

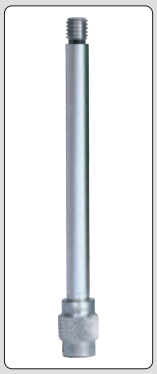

extension rod

SPECIFICATION

Code	NK-20	NK-30	NK-50	NK-100	NK-200	NK-300	NK-500
Range(N)	20	30	50	100	200	300	500
Range(Kg)	2	3	5	10	20	30	50
Resolution(N)	0.1	0.2	0.25	0.5	1	2	2.5
Accuarcy	±2% full scale						

INCLUDED ACCESSORIES

Main unit	1pc
Push tip	4pcs (flat, V type, knife-edge, point)
Pull clamp	1pc
Extension rod	1pc

OPTIONAL ACCESSORIES

Stand	FS1000

SERIES TWM TORQUE WRENCH

- Easy to set the torque value
- Accuracy: ±4%
- According to ISO6789, ASMEB107. 14

TWM25

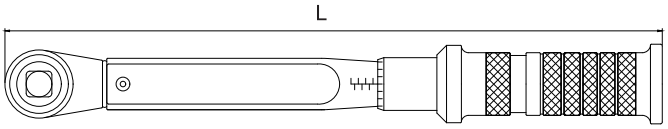

SPECIFICATION

Code	TWM25	TWM50	TWM100	TWM200	TWM340
Range	5~25N.m	10~50N.m	20~100N.m	40~200N.m	70~340N.m
Size of square drive	3/8"	3/8"	3/8"	1/2"	1/2"
Lenght(L)	275mm	275mm	380mm	505mm	695mm
Weight	420g	420g	580g	1.3kg	1.9kg

SERIES TW DIGITAL TORQUE WRENCH

- Clockwise or anti-clockwise operation
- Unti: N.m, in.lb, ft.lb, kg.cm
- Peak or real-time working mode
- Automactic power off
- With calibration certificate

TW30

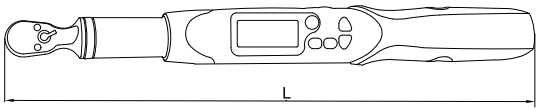

SPECIFICATION

Code	TW12	TW20	TW30	TW135	TW200
Range	2.4~12N.m	4~20N.m	6~30N.m	27~135N.m	40~200N.m
Resolution	0.01N.m	0.01N.m	0.1N.m	0.1N.m	1N.m
Clockwise operation accuracy	±3%	±3%	±2%	±2%	±2%
Anti-clockwise operation accuracy	±4%	±4%	±3%	±3%	±3%
Size of square drive	1/4"	1/4"	1/4"	3/8"	1/2"
Lenght(L)	260mm	260mm	390mm	415mm	530mm
Weight	430g	430g	830g	950g	1400g
Power	1xAAA battery			2xAAA batteries	

DIGITAL TORQUE SCREWDRIVER SERIES TQ

TQ50CN

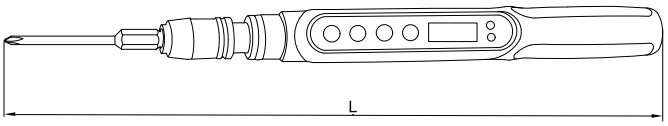

- Clockwise or anti-clockwise operation
- Peak and track working mode
- With audible and visible alarm when the value is closed to setting target
- Supplied with calibration certificate

SPECIFICATION

Code	TQ50CN	TQ200CN	TQ400CN
Range	10~50cN.m	40~200cN.m	80~400cN.m
Clockwise operation accuracy	±3%	±2.5%	±2.5%
Anti-clockwise operation accuracy	±4%	±3.5%	±3.5%
Resolution	0.1cN.m	0.1cN.m	0.1cN.m
Size of shank	1/4"	1/4"	1/4"
Length (L)	258mm	268mm	268mm
Weight	200g	200g	200g
Power	1xAAA battery		

TORQUE SCREWDRIVER SERIES TQM

TQM300

- Clockwise operation
- When achieving the setting target, there is "chatter"

SPECIFICATION

Code	TQM60	TQM120	TQM300	TQM600
Range	0.12~0.6N.m	0.24~1.2N.m	0.6~3N.m	1.2~6N.m
Clockwise operation accuracy	±6%	±6%	±6%	±6%
Graduation	0.01N.m	0.02N.m	0.05N.m	0.1N.m
Size of shank	1/4"	1/4"	1/4"	1/4"
Length (L)	161mm	161mm	186mm	186mm
Weight	300g	300g	400g	400g

SERIES TTS DIGITAL TORQUE METER

- Adjustable open size for fixing
- Peak, preset and real-time working mode
- Unit: N.m, N.cm, kgf.cm, lbf.cm, lbf.in
- Memory: 1000
- Power off automatically
- With software, can show the torque graph

TTS5

SPECIFICATION

Code	TTS1	TTS5
Range	1N.m	5N.m
Accuracy	±0.3% FS(full scale)	
Resolution	0.001N.m	
Memory	1500	
Output	USB and RS232	
Power	rechargeable battery	
Weight	0.7kg	

INCLUDED ACCESSORIES

Main unit	1pc
Charger	1pc
Software with cable	1pc
Wrench	1pc

OPTIONAL ACCESSORIES

Wireless printer	PR100
Test stand	TTS-STD

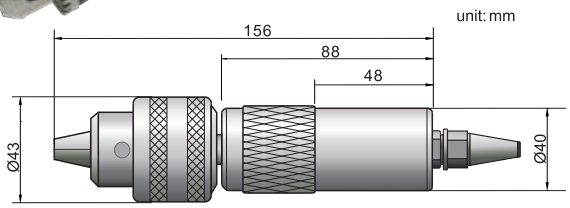

SERIES TTB DIGITAL TORQUE METER

- For torque wrench and torque screwdriver calibration
- Peak, preset and real-time working mode
- Unit: N.m, N.cm, kgf.cm, lbf.cm, lbf.in
- Memory: 1500
- Power off automatically
- With software, can show the torque graph

TTB10

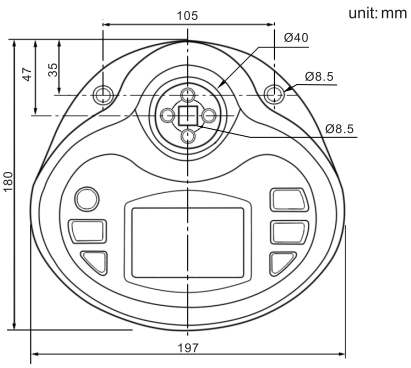

SPECIFICATION

Code	TTB5	TTB10	TTB50	TTB100
Range	5N.m	10N.m	50N.m	100N.m
Accuracy	±0.3% FS(full scale)			
Resolution	0.001N.m	0.01N.m	0.01N.m	0.1N.m
Size of square drive	1/2"			
Output	USB and RS232			
Power	rechargeable battery			
Weight	1.5kg			

INCLUDED ACCESSORIES

Main unit	1pc
Charger	1pc
Software with cable	1pc
Convertor	1pc

OPTIONAL ACCESSORIES

Wireless printer	PR100

CODE INDEX

CODE INDEX